RS venture connect

RIGGING GUIDE V 3.1

RS venture

Contents

RS venture

Contents

RS venture

SAFETY INSTRUCTIONS: RIG SELECTION

RS Venture Connect:

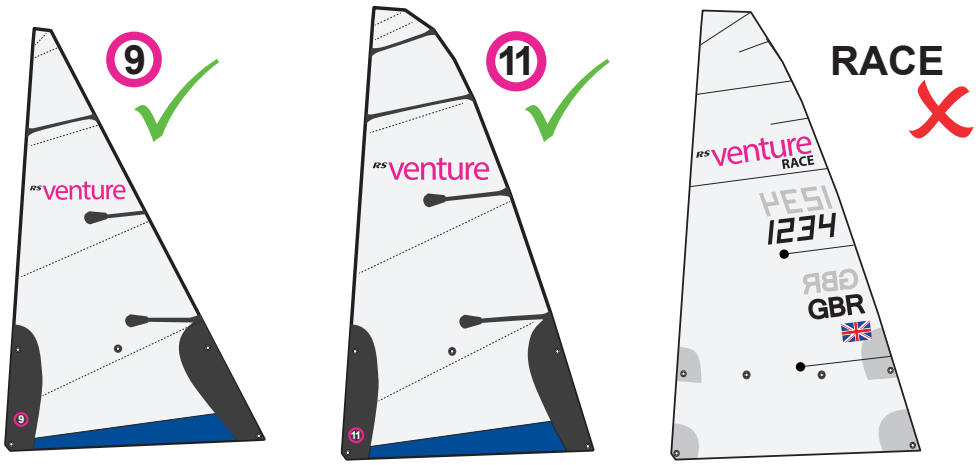

RS Venture Connect SCS:

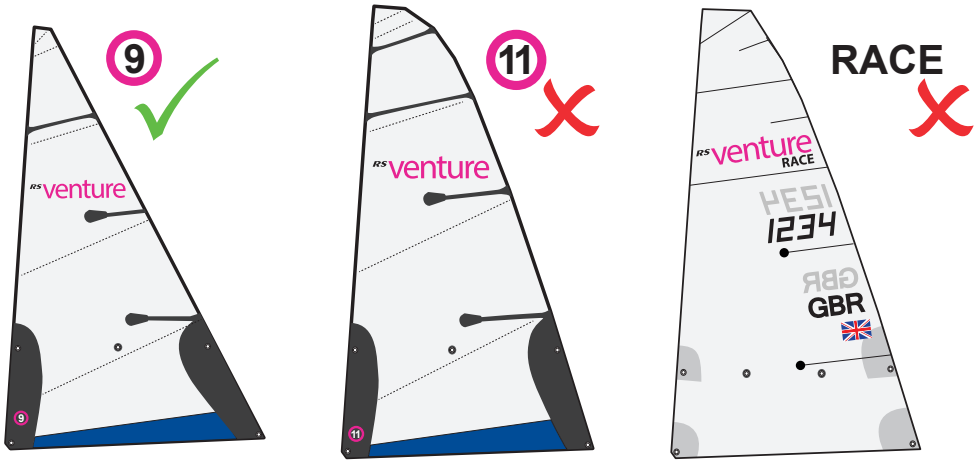

RS Venture Connect SCS Race: - With full rescue support at a World Sailing Event

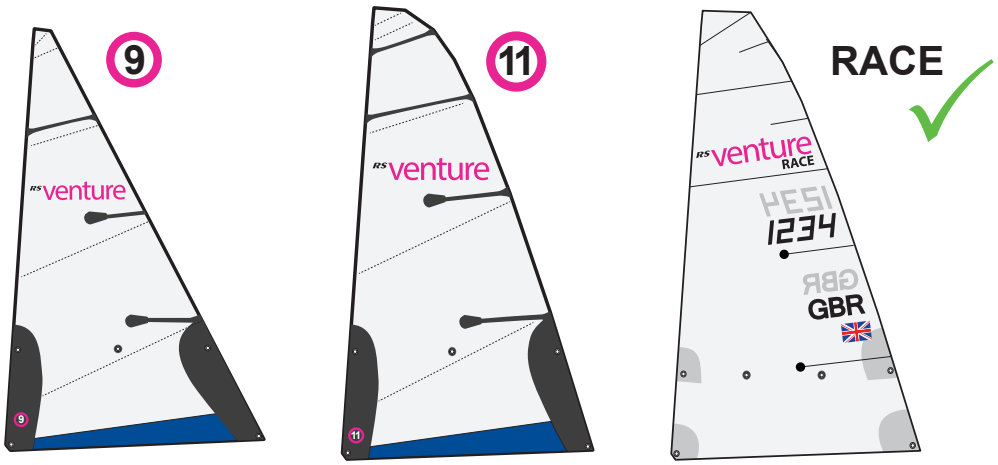

RS venture

SAFETY INSTRUCTIONS: CREW & SEAMANSHIP

RS Venture Connect:

Must have a minimum of 2 people totalling a crew weight of **160kg** as stated in the owner's manual.

If this is your first boat, or if you are changing to a type of craft that you are not familiar with, for your own safety please ensure you have adequate experience before assuming command of the craft. If you are unsure, RS, an RS Dealer or your National Sailing Federation will advise you of a local sailing school.

RS Venture SCS:

Due to the complex nature of this product it is vital that all sailing sessions have a person who is able to assist in the event of mechanical or electrical failure either on board or in close supervision

The RS Venture Connect SCS meets the requirments of the Recreational Craft Directive 2013/53/EU for capsize recovery. However, it must be apreciated that in some circumstances the craft may fully invert or remain on its side during a capsize. A combined mobile crew weight of **160KG** will be required to right the boat from a fully inverted position if a rescue boat is not available.

The RS Venture Connect SCS and Power Assist Package can be used in many scenarios and the Rigging Guide only gives generic advice for its operation. Owners and operators should take onboard the spirit of this advice and apply it to their unique environment.

The RS Venture SCS and Power Assist Package presents many risks in the event of an accident including entrapment and entanglement that may result in serious injury or death.

Owners and Operators should risk access their own unique environment and take appropriate action before venturing afloat.

RS Sailing recommend the following windspeed / rig combinations when using the twin seat configuration:

- 12 - 14knts the main sail is reefed
- 17 - 18knts the spinnaker is not flown
- 24 - 25knts sailing is aborted

RS venture

SAFETY INSTRUCTIONS: KEEL SECURITY

DO NOT go sailing until you ensure that the keel strap is secured correctly.

DO NOT go sailing if the securing device is damaged, if you are unsure please contact your local RS Dealer for advice.

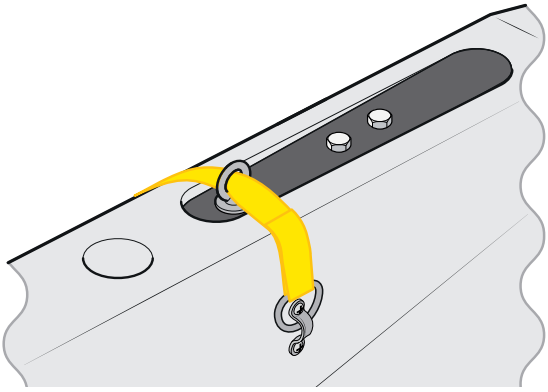

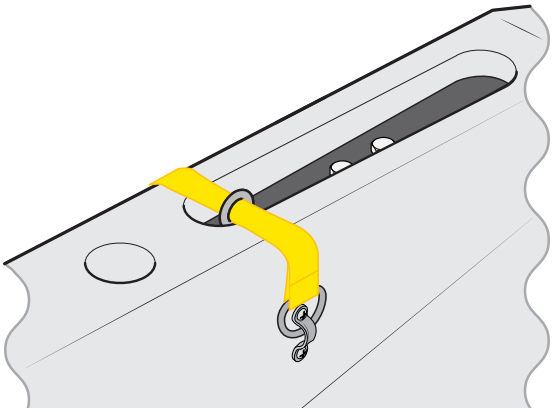

If your boat is fitted with a secondary keel securing device please make sure this is secured correctly before going sailing.

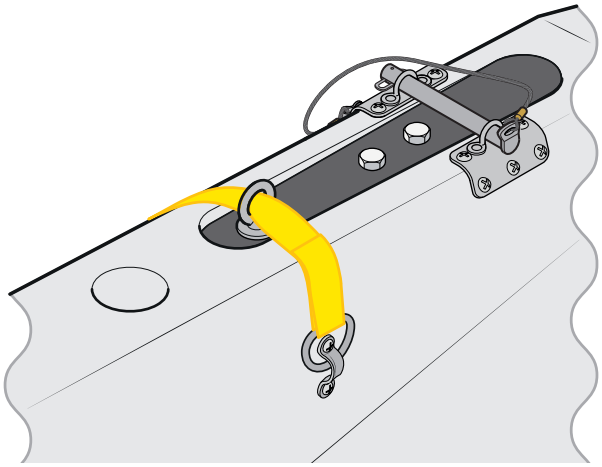

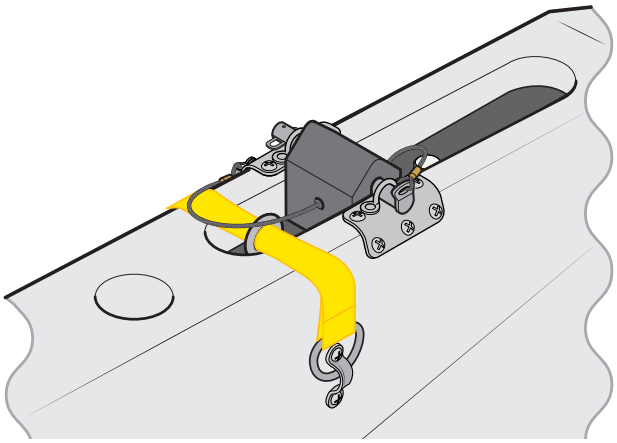

Relace the Velcro securing strap every 12 months.

When using the RS Venture Connect SCS ensure that the correct risk assesments are carried out before going sailing. This will need to be done for secific clubs. If you are unsure please contact RS Sailing for guidance.

Introduction

Congratulations on the purchase of your new RS Venture Connect, and thank you for choosing an RS product. We are confident that you will have many hours of great sailing and racing in this truly excellent design. The RS Venture Connect is an exciting boat to sail and offers fantastic performance. This manual has been compiled to help you to gain the maximum enjoyment from your RS Venture Connect, in a safe manner. It contains details of the craft, the equipment supplied or fitted, its systems, and information on its safe operation and maintenance. Please read this manual carefully and be sure that you understand its contents before using your RS Venture Connect.

Your safety is our concern but your responsibility. This manual will not instruct you in boating safety or seamanship. If this is your first boat, or if you are changing to a type of craft that you are not familiar with, for your own safety and comfort, please ensure that you have adequate experience before assuming command of the craft. If you are unsure, RS, your RS Dealer, or your national sailing federation – for example, the Royal Yachting Association – will be able to advise you of a local sailing school, or a competent instructor.

This Rigging Guide covers all variations of the RS Venture Connect, SCS and Power Assist models and exceeds 150 pages in length. Where possible we try to instruct you to jump sections if they are not applicable to you. If you are printing a hard copy please be responsible and note the sections that are relevant and print only those.

The Online (www.rssailing.com) location of the Rigging Guide is the most up to-date copy. Due to the nature of the SCS and Power Assist boats regular changes and developments will occur. As required the Online copy will be revised to reflect these changes.

For further information, spares, and accessories, please contact:
RS Sailing
Premier Way
Abbey Park
Romsey
Hampshire SO51 9DQ
Tel: +44 (0)1794 526760
Email: info@RSsailing.com

For details of your local RS Dealer, please visit www.RSsailing.com

RS venture connect

Rigging Guide

PLEASE FOLLOW RIGGING GUIDE IN CORRECT ORDER

RS venture connect **RS Connect 1.1**

COMPONENTS LIST

ROPE PACK

		QUANTITY
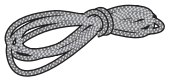	Mainsheet	1
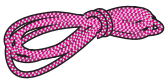	Jib Sheet	1

HARDWARE

	Owner's manual	1
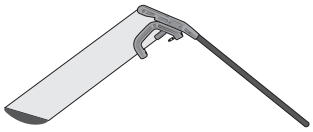	Rudder	2
	Tiller extension	1
	Com bar	1
	Boom	1
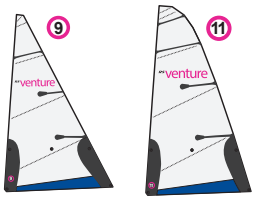	Mainsail	1
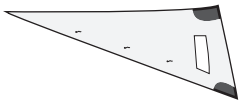	Jib	1
	Keel Hoist	1
	Mast and rigging	1
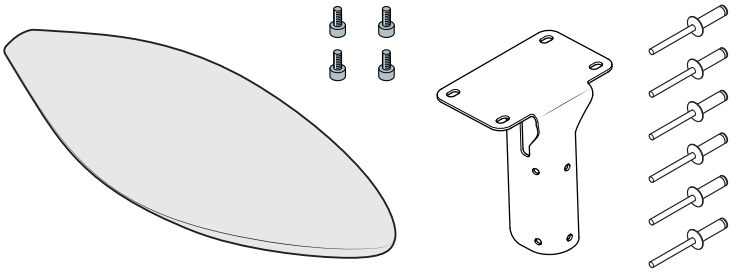	Masthead Float Kit	1

COMPONENTS LIST

SPINNAKER KIT

	Spinnaker sheets	1
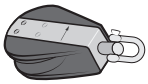	Ratchet blocks	2
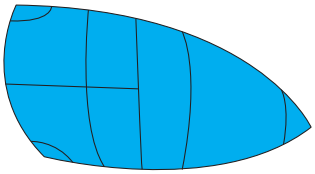	Spinnaker	1

2. Preparation

Your RS Venture Connect comes complete with all the components necessary to take the boat sailing. In order to commission it, you will need the following tools:

- Pliers or a shackle key
- Small, flat-bladed screw driver
- PVC electrician's tape

Whilst your RS Venture has been carefully prepared, it is important that new owners should check that shackles and knots are tight. This is especially important when the boat is new, as traveling can loosen seemingly tight fittings and knots. It is also important to check such items prior to sailing regularly.

2.1 - Adding the Mainsheet Bridle

a) Locate the 40mm single block, mainsheet bridle and 2 x mainsheet bridle elastics.

Take the middle of the mainsheet bridle and form a loop. Pass this loop through the 40mm block and pass the tails back through the loop to form **knot #6**.

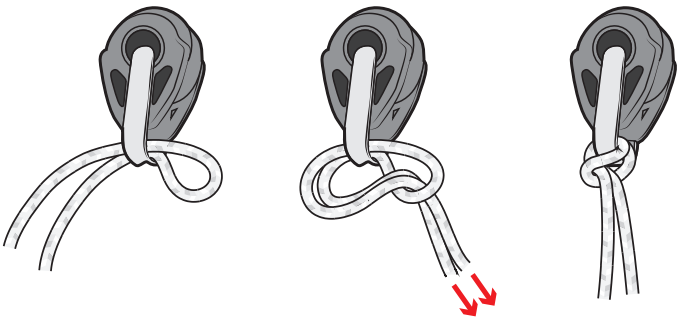

b)

Pass the end of the bridle through the forward hole in the gunwale and tie **knot #3** underneath.

Repeat on the other side of the boat.

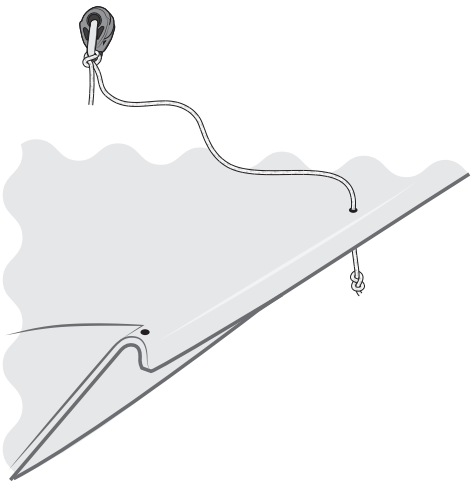

c)

Tie each elastic to the 40mm block with **knot #1** as shown.

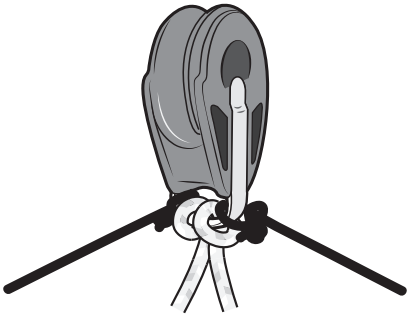

d) Pass the elastic through the rearmost hole in the gunwale and tie **knot #3** underneath.

Repeat on the other side of the boat.

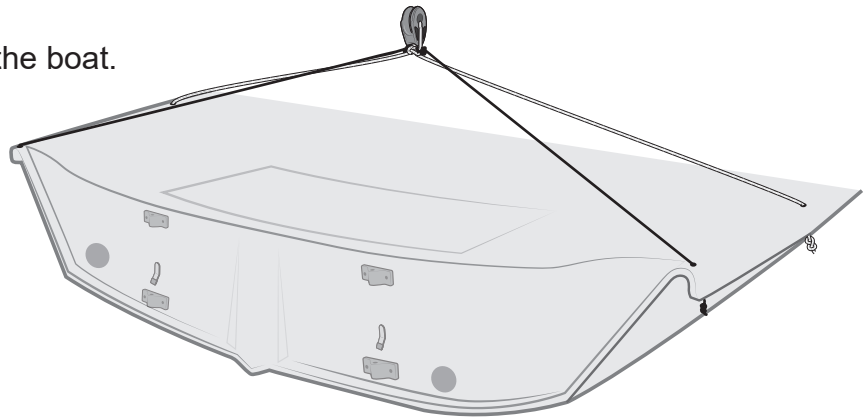

RS venture connect

Rigging Guide

3. Rigging the Mast

To complete this section you will need:

- The mast
- A flat-bladed screw driver

PLEASE FOLLOW RIGGING GUIDE IN CORRECT ORDER

3.1 - Fitting The Spreaders To The mast

It is worth taking time to ensure that this section is completed correctly. Improperly fitted spreaders will result in undesirable sailing characteristics, and may even result in failure of the mast.

a) Carefully unpack the spreaders from the top of the mast, being sure not to damage any of the securing split rings.

b) Unwind the shrouds and forestay from around the mast, and unwrap from the packaging.

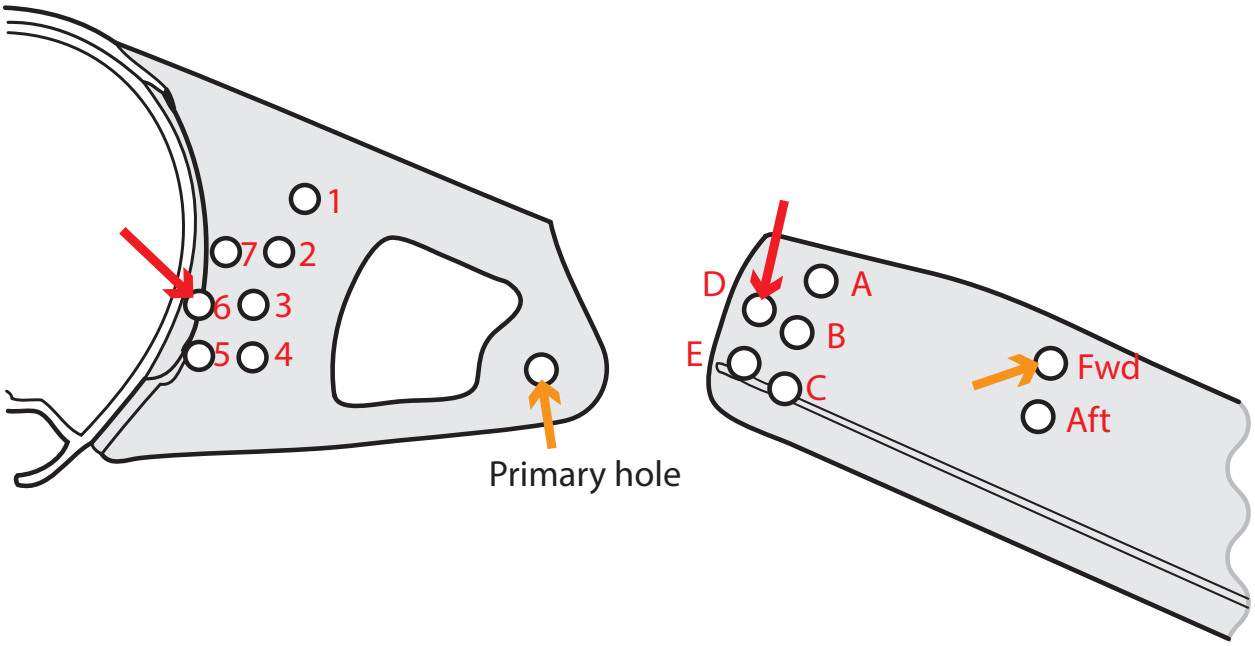

The Primary pin fits through the bracket's **PRIMARY HOLE** and through the **FORWARD HOLE** in the spreader.

The Adjuster pin fits down through **HOLE 6** in the bracket and **HOLE D** in the spreader.

Spreader end caps:

The spreader end cap incorporates two shroud wire slots to give a tight grip on either 2.5 or 3mm wire. The sizes are identified on the front face of the end cap.The RS Venture Connect uses 3mm shroud wire so **the 3mm slot should be used.**

The end cap can also be rotated so that the shroud can be positioned at either the forward or aft position of the spreader end (see diagram above). **For the RS Venture Connect the end cap should hold the shroud in the forward position.**

To attach the shroud, slacken the end screw, rotate the end clamp if necessary, then insert the shroud. Ensure that the shroud is tensioned between T-Terminal and spreader tip, then tighten the screw firmly. This method “locks in” the dihedral angle.

Length Adjustment:
The position is described by the number of adjustment holes visible. **For the RS Venture Connect there should be 1 hole visible as shown in the diagram below.**

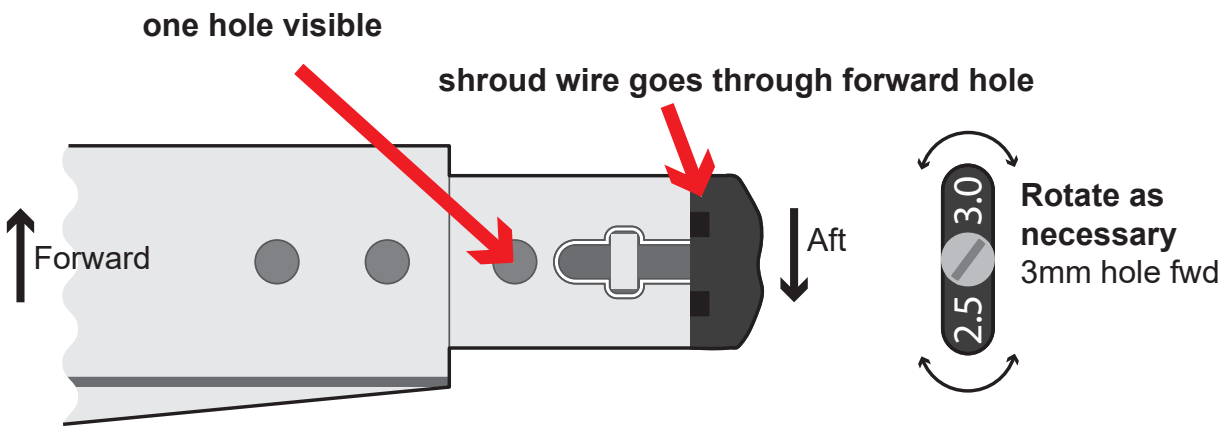

All clevis pins must be fitted with the flat head on top, and locked with a split ring.

Tape all split rings, pins and the outboard end of the spreader extrusion.

This will reduce chafe on the mainsail and prevent flailing sails/halyards becoming damaged. Self-amalgamating tape is best, but PVC electrical tape is an adequate alternative.

3.3 - Fitting the Masthead Float

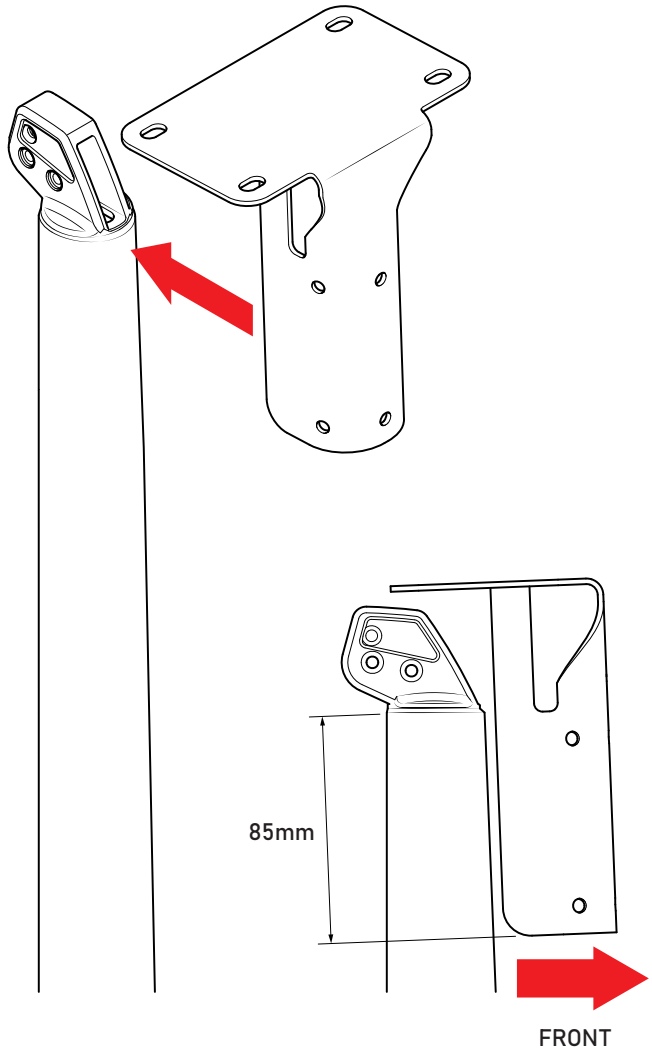

Place the masthead float bracket on the front of the mast, the lower edge should be 85mm below the welded part of the mast.

Mark and drill the 6 mounting holes in the mast, follow the sequence in the image below. Starting with the lower front hole. Once the 2 front holes are drilled, push 2 rivets into the holes to hold the position of the bracket. Now dill the other 4 holes.

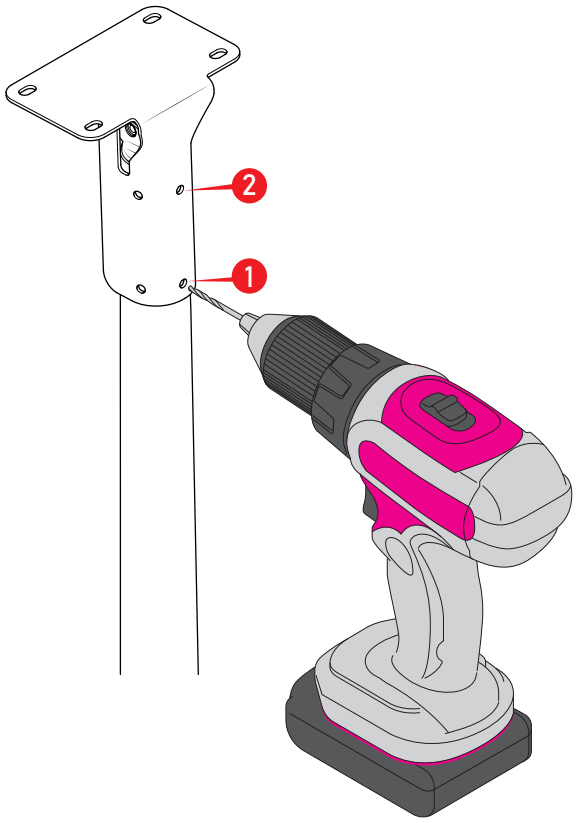

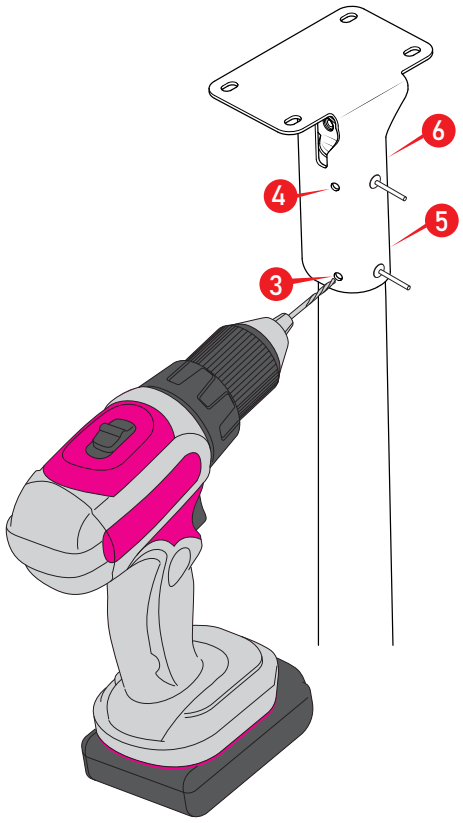

3.3 - Fitting the Masthead Float

Once all the holes are drilled, remove the bracket and add a generous coating of Duralac anti-corrosive jointing compound or equivalent to prevent any corrosion.

Relocate the bracket and secure using the 6 rivets supplied. Follow the sequence in the image.

Once the bracket is secured then attach the float onto the bracket using the 4 cap head screws provided. Make sure these screws are tightened correctly to prevent the float coming loose whilst sailing.

TIP: Check the bolts holding the masthead float on, every time you go sailing.

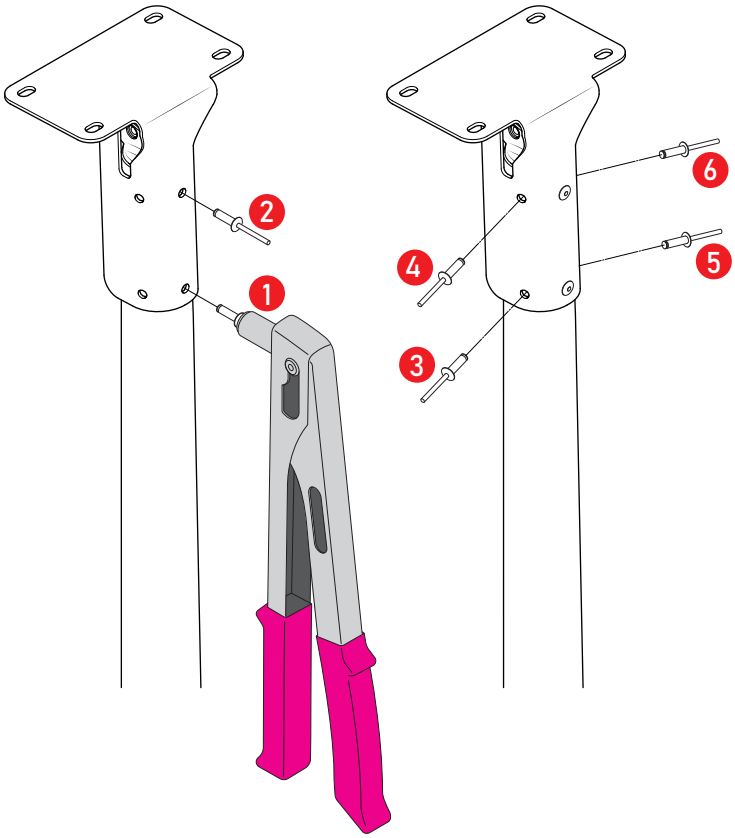

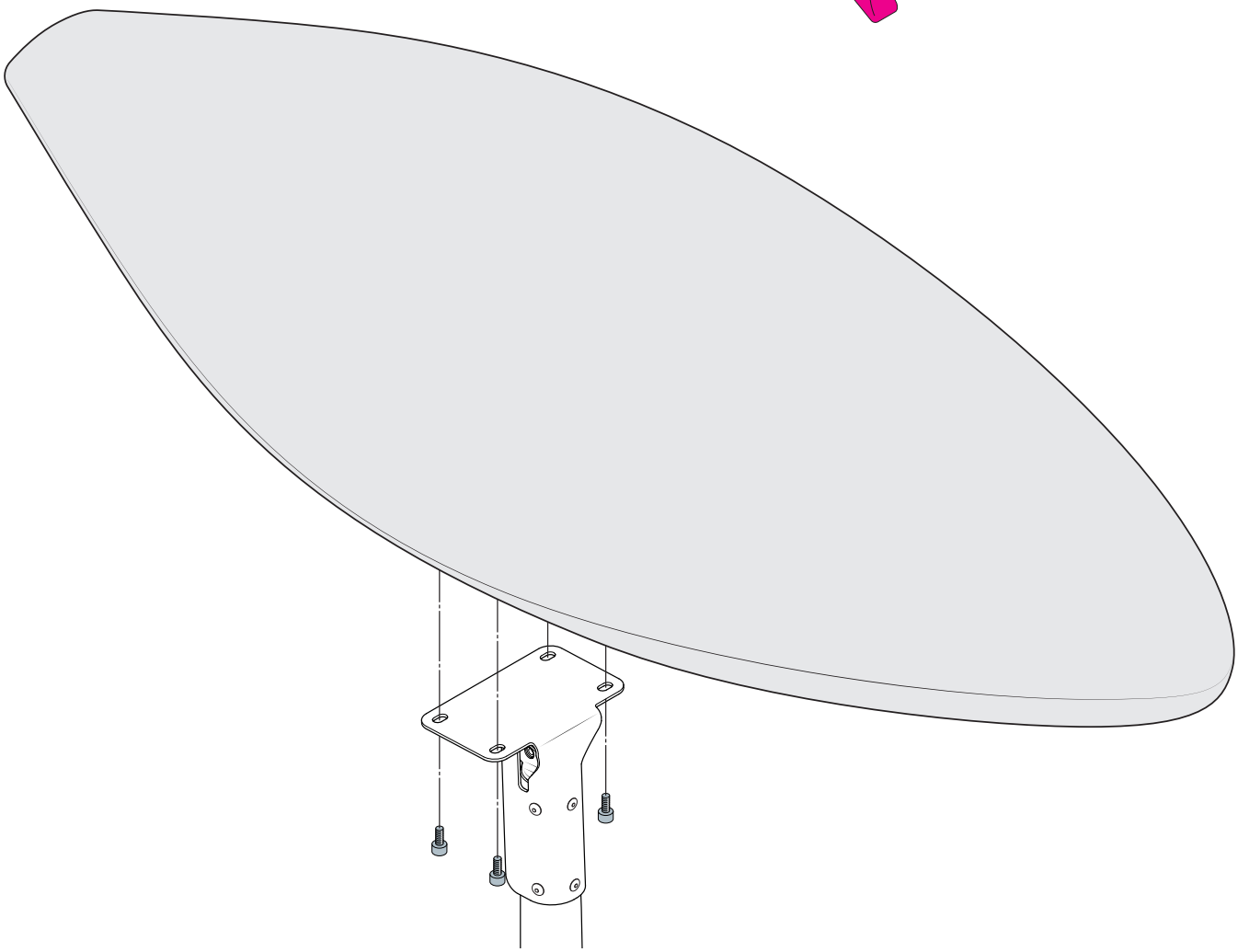

3.4 - Stepping the Mast

Now the mast is ready to be put up in the boat, or “stepped”.

BEFORE STEPPING THE MAST, CHECK THAT YOU ARE NOT IN THE VICINITY OF OVERHEAD POWER CABLES

REMEMBER
Check that both ends of the main halyard, jib halyard, and gennaker halyard are tied off at the bottom end of the mast so that they are within easy reach when the mast is stepped.

Before stepping the mast, familiarise yourself with how the “foot” (bottom end) of the mast will fit into the “step” (fitted to the boat).

The mast foot has two rectangular blocks on the bottom, separated by a groove. Both of these blocks will fit between the bolt at the front of the mast step, and the bolt at the back.

Ensure that the shrouds and forestay are fitted correctly and loose at the lower end. Ensure all 3 halyards are tied to the pole ring on the front of the mast.

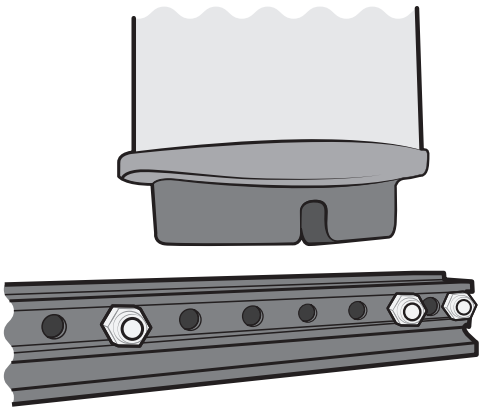

Note: It is recommended that the mast should always be stepped with 2 people. If the wind is blowing, there will be a lot of pressure at the top of the mast making it wave around. Consider finding a second helper if you feel you will struggle!

3.4 - Stepping the Mast

a)

Raise the mast so that it is standing on the ground next to the boat, adjacent to the mast gate. This is most easily done if your helper places a foot against and over the base of the mast, whilst you lift the mast from about mid section until it is upright. Your helper can now easily support the mast so long as it is kept upright.

b)

You now climb into the boat and stand squarely either side of the middle of the boat, close to the mast gate. The mast should be lifted, keeping bolt upright of course, so it is close to the gunwale for you to lift in.

c)

You can now lift the mast up over the gunwale of the Venture, keeping it upright of course, and rest it down in the bottom of the boat, just aft of the mast step.

d)

Now lift the mast gently forward to securely locate into the mast step, easing it into the mast gate as it goes. Now you are able to close the mast gate and attach the forestay to the foredeck u-bolt with the snap-shackle provided.

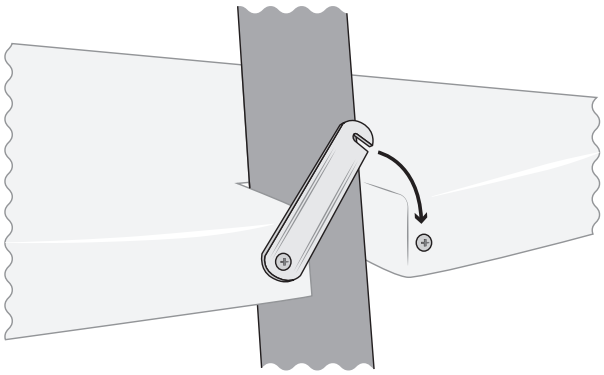

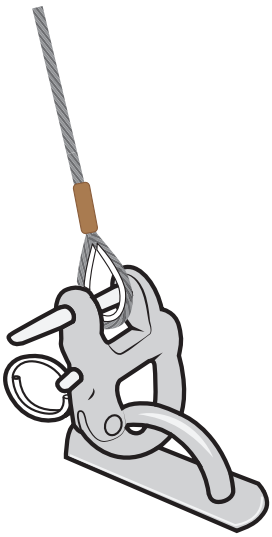

e)

Attach the shrouds to the middle of the shroud adjuster plate with the clevis pin and split ring provided. Wrap PVC electrician's tape around the split rings for security, and to avoid snagging. The between hole 7 - 9 is a good place to start.

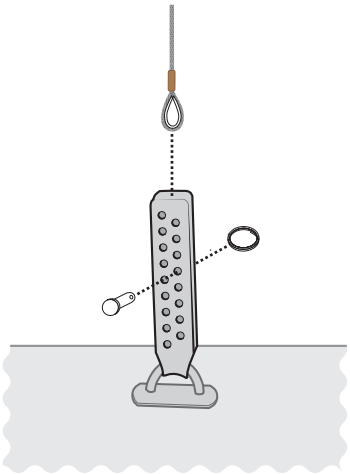

RS venture connect

Rigging Guide

4. Boom

To complete this section, you will need:

- The boom
- The gnav bar
- The Mainsheet

PLEASE FOLLOW RIGGING GUIDE IN CORRECT ORDER

4.1 - Rigging the Gnav

a)

Connect the gnav bar to the slider at the front end of the boom. Sliders often differ in appearance, but all work in the same way.

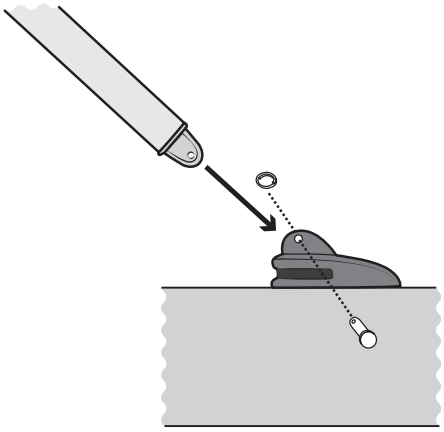

b)

Connect the front of the boom to the gooseneck on the mast.

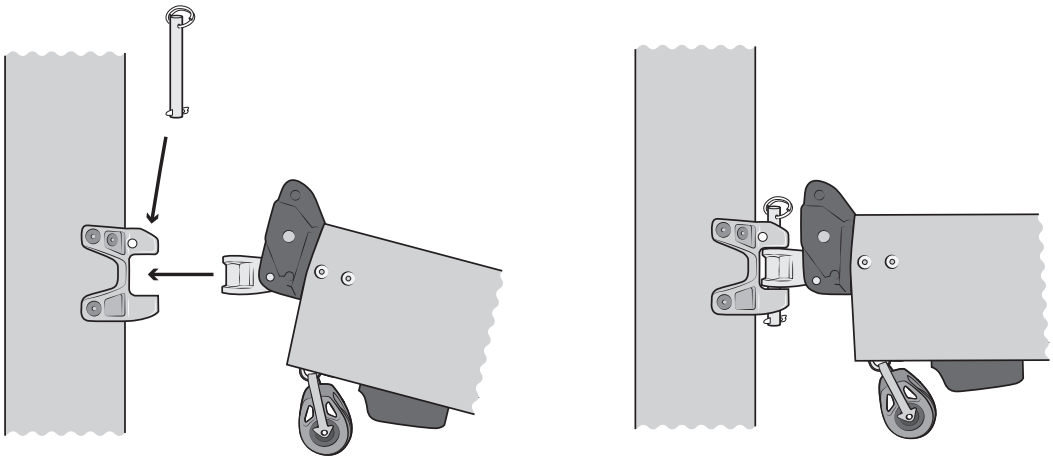

c)

Connect the upper end of the gnav bar to the bracket on the mast above the gooseneck.

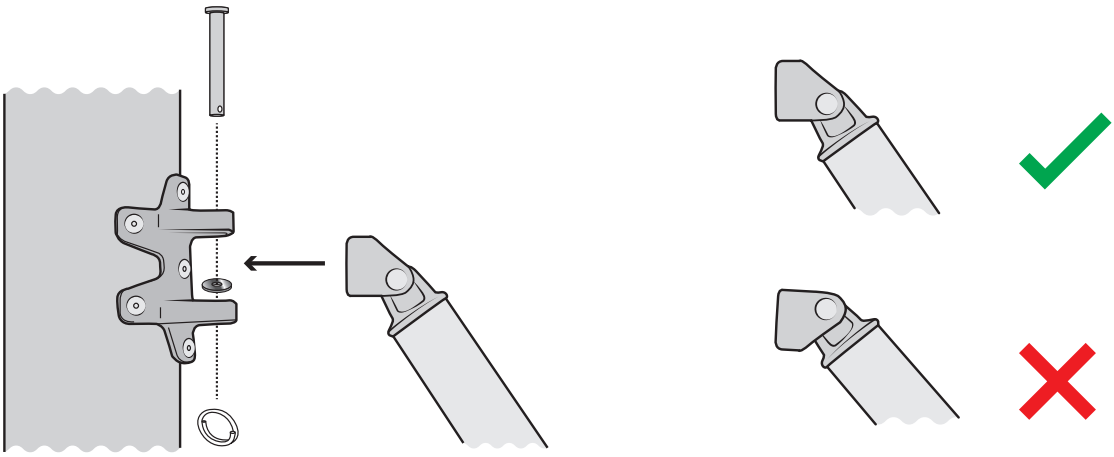

It is vital that the gnav toggle is inserted as shown above. Failure to do so will result in damage to the strut assembly.

4.1 - Rigging the Gnav

d)

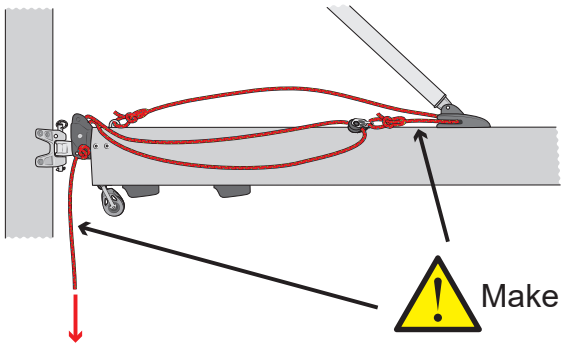

Feed the gnav control line down through the gooseneck block.

Make sure purchase is extended fully when sail is up.

e)

Feed the gnav control line through the cleat below the boom. Tie a **knot #3** in the end of the rope.

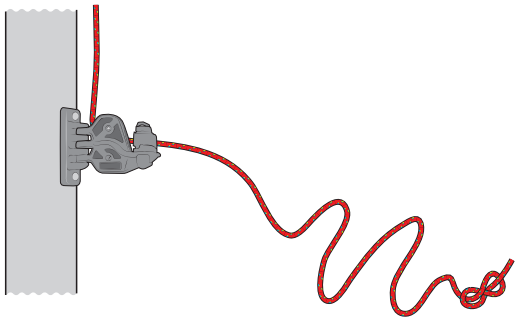

TOP TIP
You can keep the boom up by hoisting with the mainsheet at the rear of the boom.

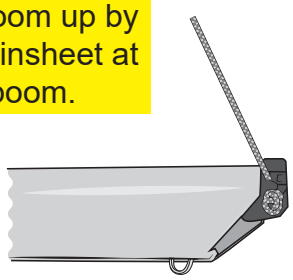

4.2 - Rigging the Mainsheet

a)

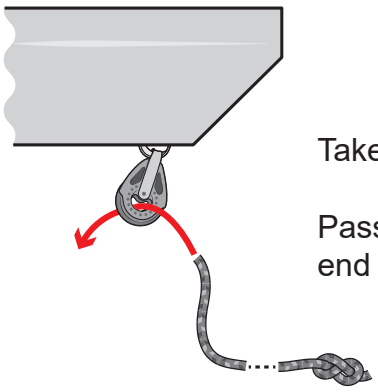

Take one end of the mainsheet and tie **knot #3** in the end.

Pass the other end through the center hole of the block at the end of the boom.

b)

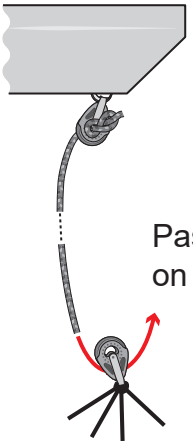

Pass the end of the mainsheet down and through the block on the mainsheet bridle.

c)

Pass the end of the mainsheet back up and through the block on the end of the boom.

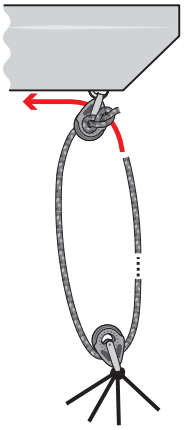

d)

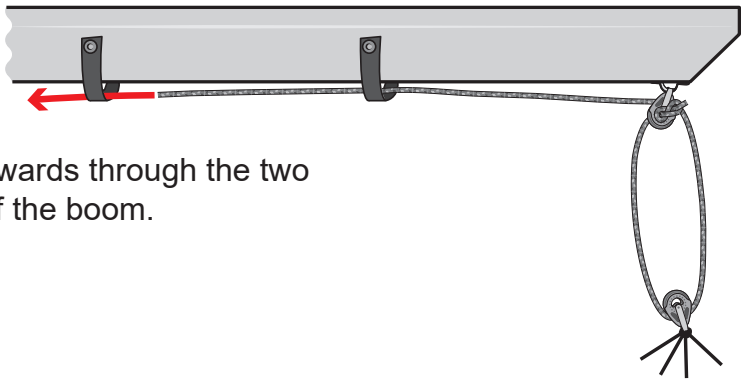

Pass the end of the mainsheet forwards through the two webbing loops on the underside of the boom.

e)

Pass the end of the mainsheet through the block on the underside of the boom.

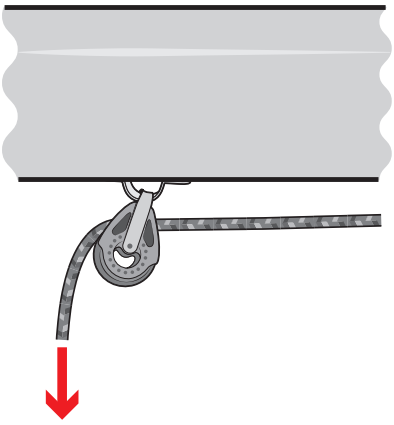

f)

Pass the end of the mainsheet through the mainsheet block and jammer base, then tie **knot #3** in the end.

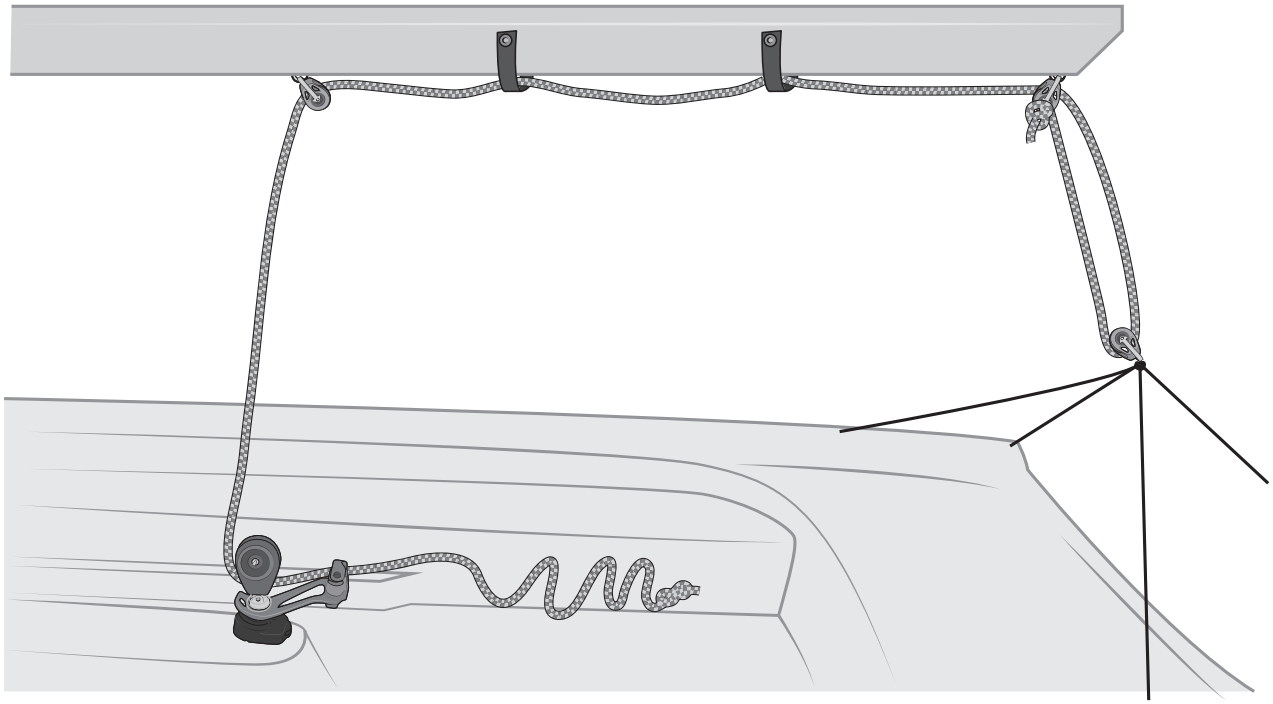

RS venture connect

Rigging Guide

5. Sails

PLEASE FOLLOW RIGGING GUIDE IN CORRECT ORDER

5.1 - Hoisting the Jib

To complete this section, you will require:

- The jib
- The jib sheets
- The top furling unit as attached to the jib halyard

a)

Make sure the furling line is uncleated and that the furling unit is fully charged – i.e. all the furling line is wound round the unit and very little left at the cleat.

b)

Unroll the jib and connect the tack of the sail direct to the lower furling unit via the pin and split ring.

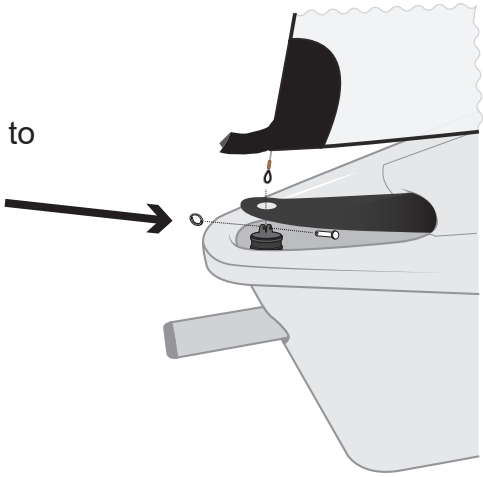

c)

Attach the head of the jib to the top furling unit.

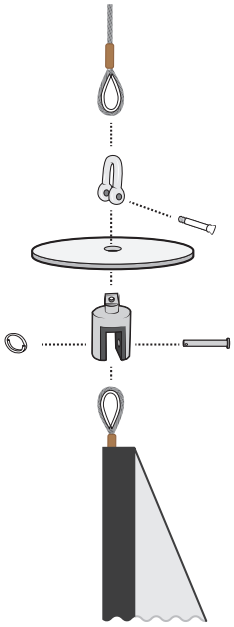

Use tape to cover all clevis rings

d) Pull the rope end of the halyard from the mast exit, just below deck level to hoist the jib. When the jib halyard is pulled all the way up, a wire loop will emerge from the mast.

e) Hook the rig tension tackle to this wire loop, then pull the rig tension on, ensuring that it is in the cleat properly. You should pull enough tension into the rig so that the shrouds feel firm.

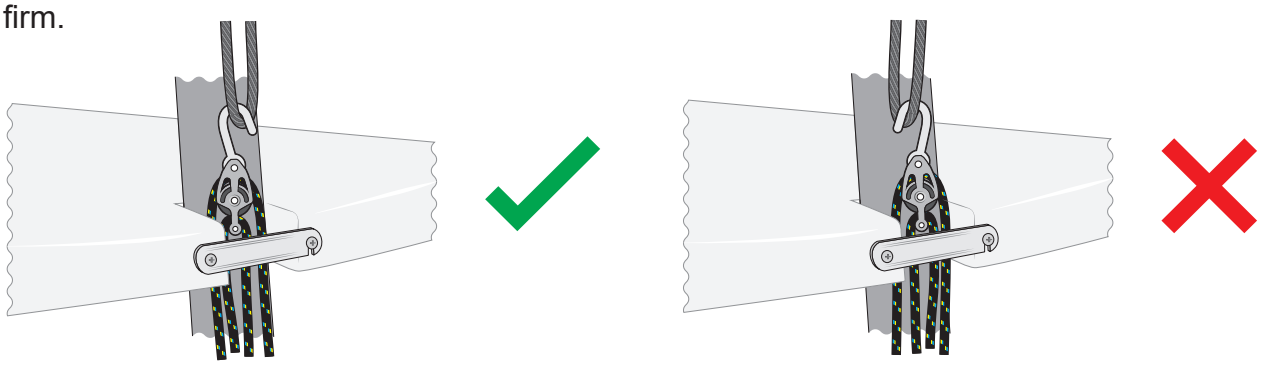

f) Stow the ends of the rig tension tackle and the rope halyard in the pouch on the side of the spinnaker chute.

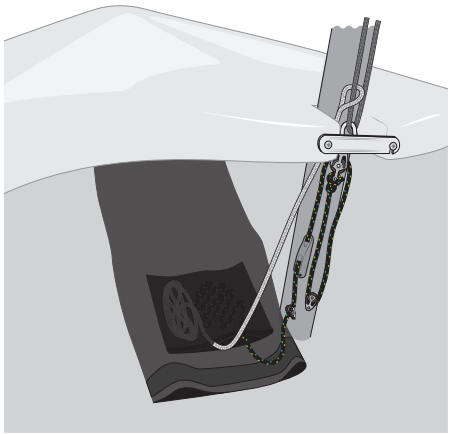

g)

Find the middle of the jib sheet and tie **knot #6** through the cringle in the jib clew. The result should look as below.

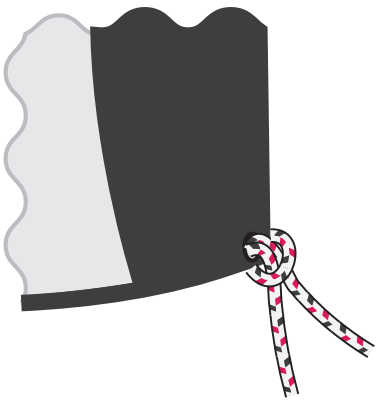

5.1 - Hoisting the Jib

h) Lead one end of the jib sheet along the side of the boat and then down to the jib fairlead and cleat. Thread it through the fairlead and through the jib cleat. Repeat with the other end of the jib sheet, making sure they pass either side of the mast. You can either tie a figure-of-eight knot in each sheet, or tie the two ends together. Preferably tie together.

Jib sheet arrangement

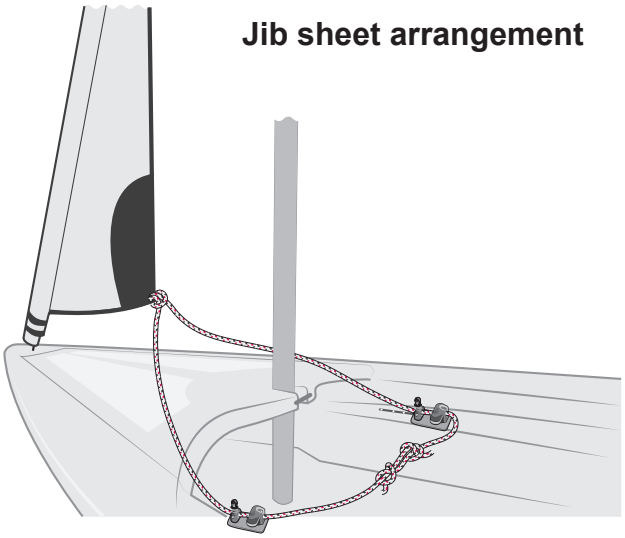

5.2 - Furling the Jib

a)

Furling and unfurling the jib is best done from the front of the cockpit, or standing on the starboard side of the boat adjacent to the shroud - in both cases with good access to the furling cleat. To furl the jib, hold a little tension on the jib sheet and then firmly pull the furling line from the cleat. To unfurl, it is the reverse – pull the sheet and ease the furling line through the cleat. In both cases ensure the spinnaker halyard is pulled in close to the mast to ensure it does not get caught in top of the jib.

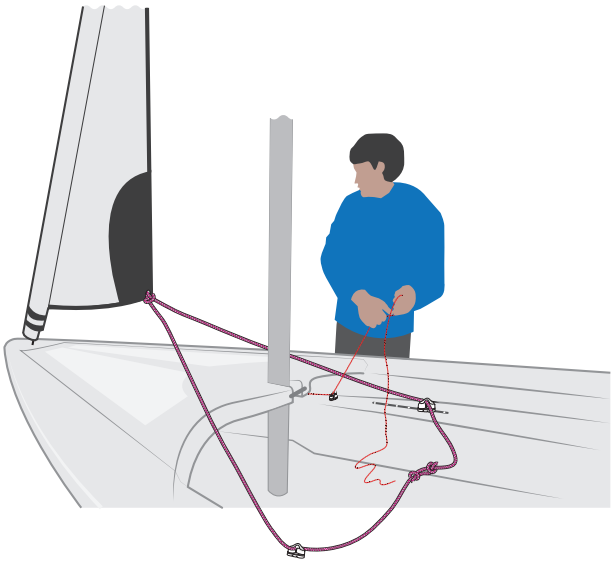

NB. Furling the jib – take care the spinnaker halyard does not get caught at the top of the jib furler – pull it in towards the mast to keep it clear of the top of the jib.

b)

NB. Once the jib is hoisted, whether furled or not, and the halyard tensioned, the forestay is redundant and should be stowed out of the way against the mast, with the shock-cord and clip provided.

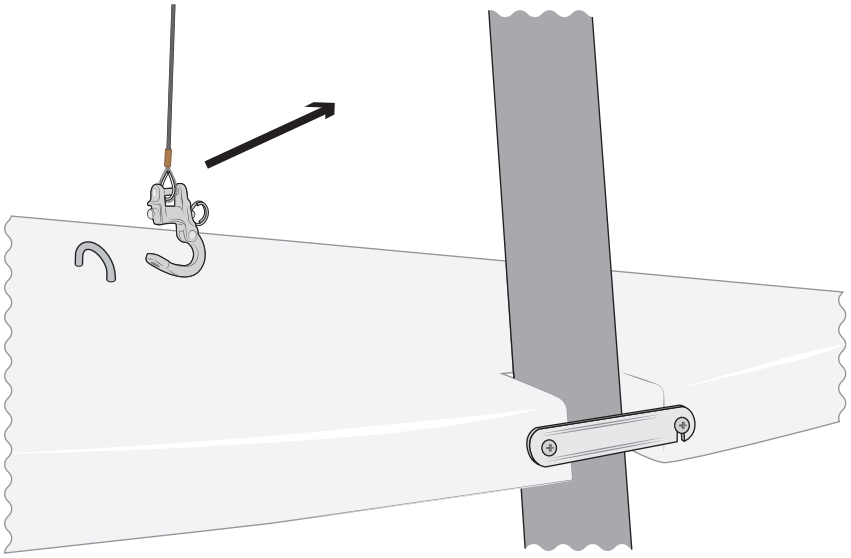

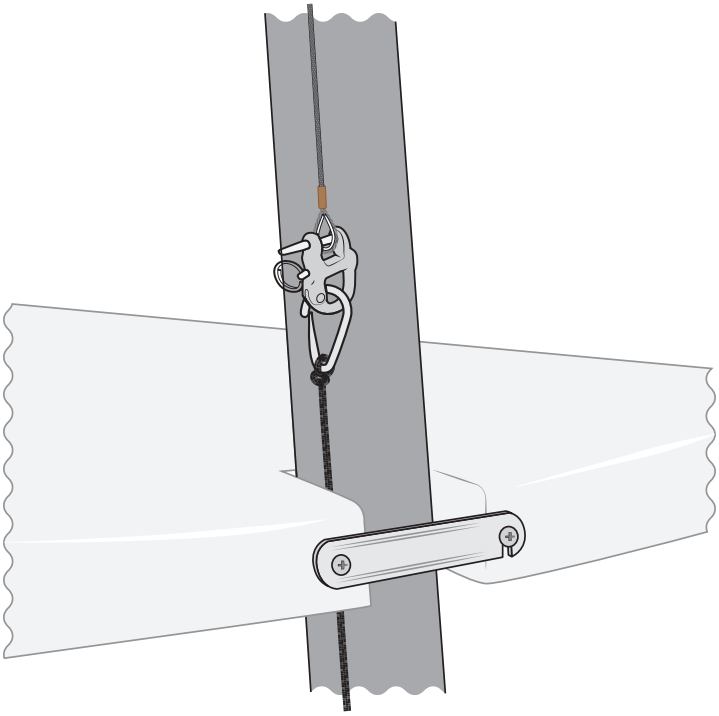

The forestay must be reattached before the jib is lowered. Failure to do so may result in the mast falling down.

5.4 - Hoisting the Mainsail

To hoist the mainsail:

a) Unroll the mainsail.

b) Take the end of the main halyard that emerges from the top of the mast, and tie it to the head of the mainsail, using **knot #1**.

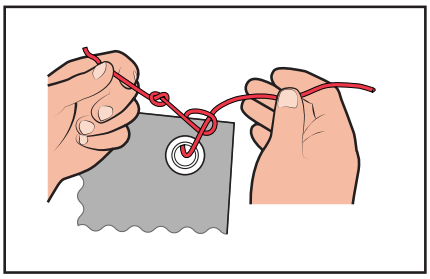

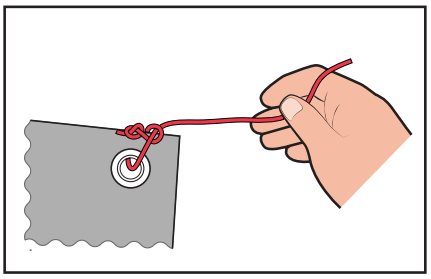

c)

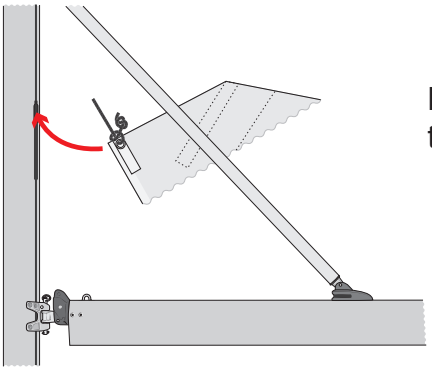

Put the top of the main sail into the opening in the mast track, just above the gooseneck mast collar.

d) Holding the main sail in line with the mast, pull on the end of the main halyard from the block at the bottom of the mast.

Stop hoisting the sail approximately 60cm / 2ft from the top. Refer to section 5.5 and attach the mainsail to the boom. Continue to fully hoist the sail. You will need to keep the sail in line with the mast to make pulling it up easier, especially when passing the batten pockets.

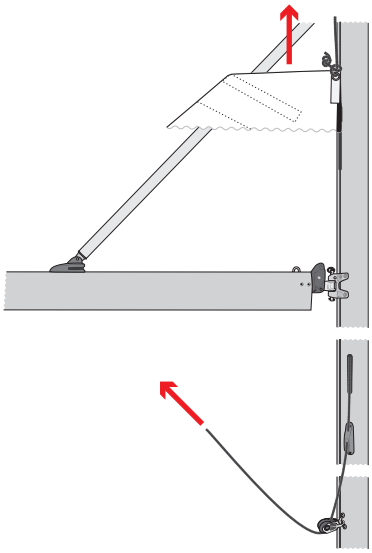

If you are hoisting full sail ensure that the luff reefing slug, used for and adjacent to the reef point, stays OUT of the mast track.

e)

Tidy the main halyard and stow it in the halyard bag next to the mast, or if you have a spinnaker chute, in the Velcro pocket under the chute sock at the aft end.

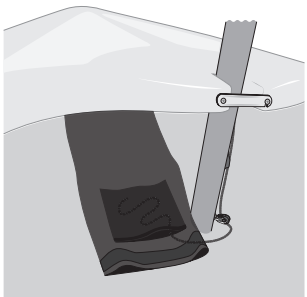

5.5 - Rigging the Outhaul

a)

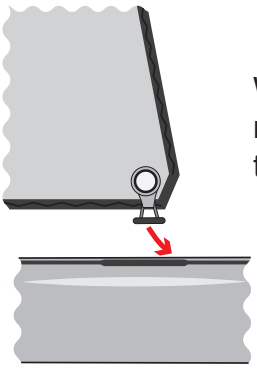

When the main sail is almost at the top of the mast, slide the mainsail clew slug into the track on the top of the boom.

b)

Pass the end of the outhaul rope through the clew of the main sail and clip it on the end of the boom Ensure that the main halyard rope is in the cleat and pull the main sail to the top. Pull on the main sail at the bottom corner near the mast to check that it is properly cleated.

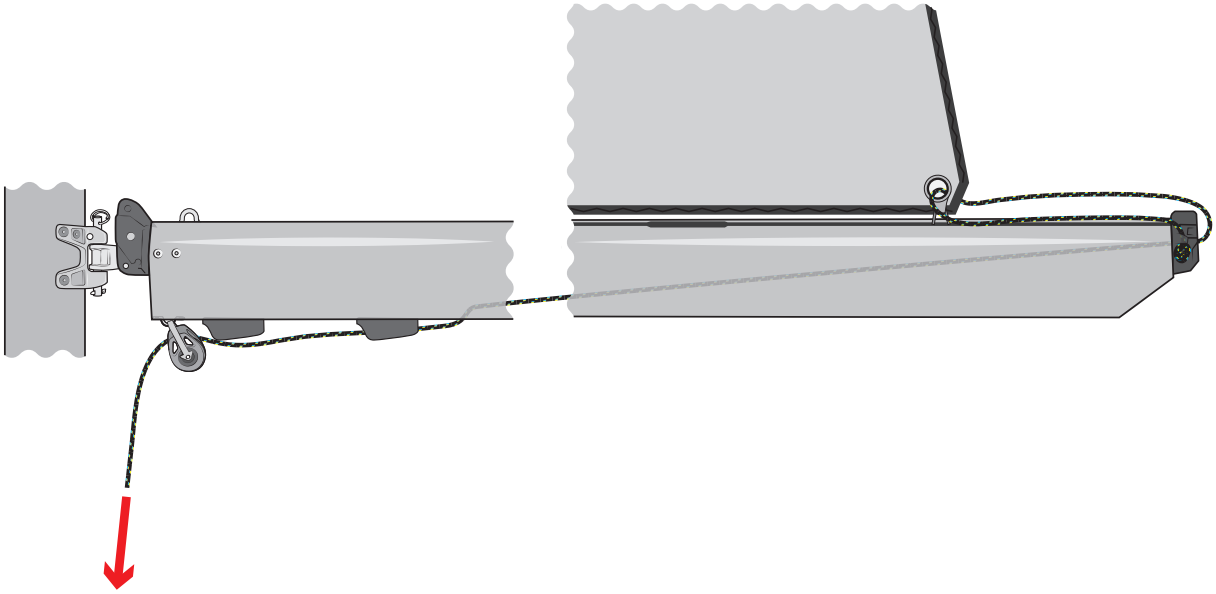

c)

Slide the mainsail tack slug into the mast track.

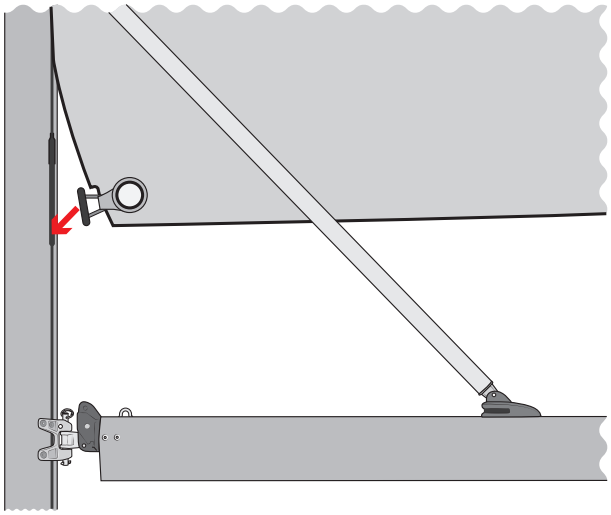

5.6 - Rigging the Downhaul

a)

The downhaul is already tied to the gooseneck. Pass the end of the downhaul through the eyelet in the tack of the main sail.

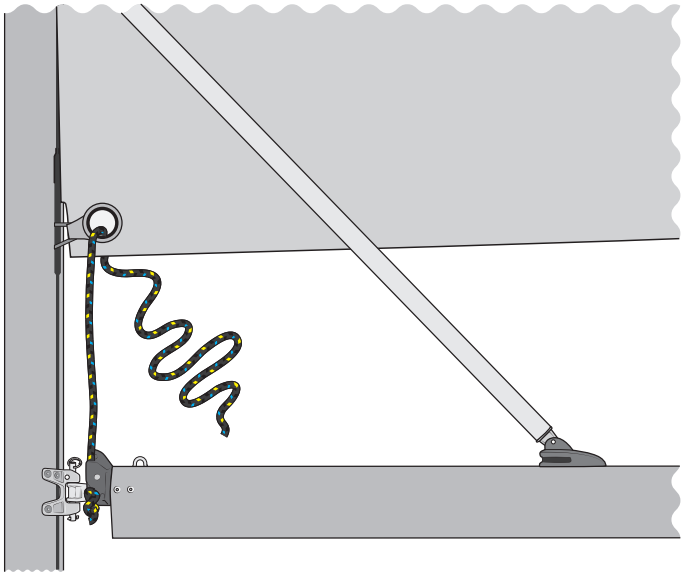

b)

Pass the end of the downhaul through the cleat on the side of the mast.

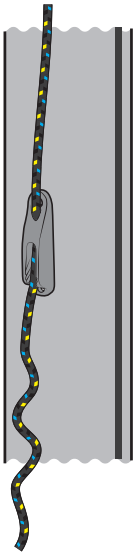

RS venture connect

Rigging Guide

6. Gennaker

To complete this section, you will need:

- 1 x RS Venture gennaker
- 1 x gennaker sheet
- 2 x ratchet blocks

PLEASE FOLLOW RIGGING GUIDE IN CORRECT ORDER

6.1 - Rigging the Gennaker Halyard

a) Pull the bowsprit out to enable the bowsprit outhaul block to be recovered from under the foredeck towards the mast.

b) Take the loose end of the gennaker halyard from the sheave on the front of the mast, where it exits at the base. Lead it forward through the bowsprit outhaul block and back through the fairlead on the side of the mast.

c) Continue to thread the halyard through the cleat with the metal fairlead on the centreboard case. Next through the 30mm block positioned just aft of the cleat. This is the hoist block.

d) Lead the halyard over the center board and through the 30mm block attached to the forward toestrap mount. This is the drop block. Finally lead the halyard into the rear of the gennaker chute and using the tiller extension poke the halyard forward until it appears from the chute mouth. Secure this end of the halyard onto something solid for now so it does not disappear back into the chute.

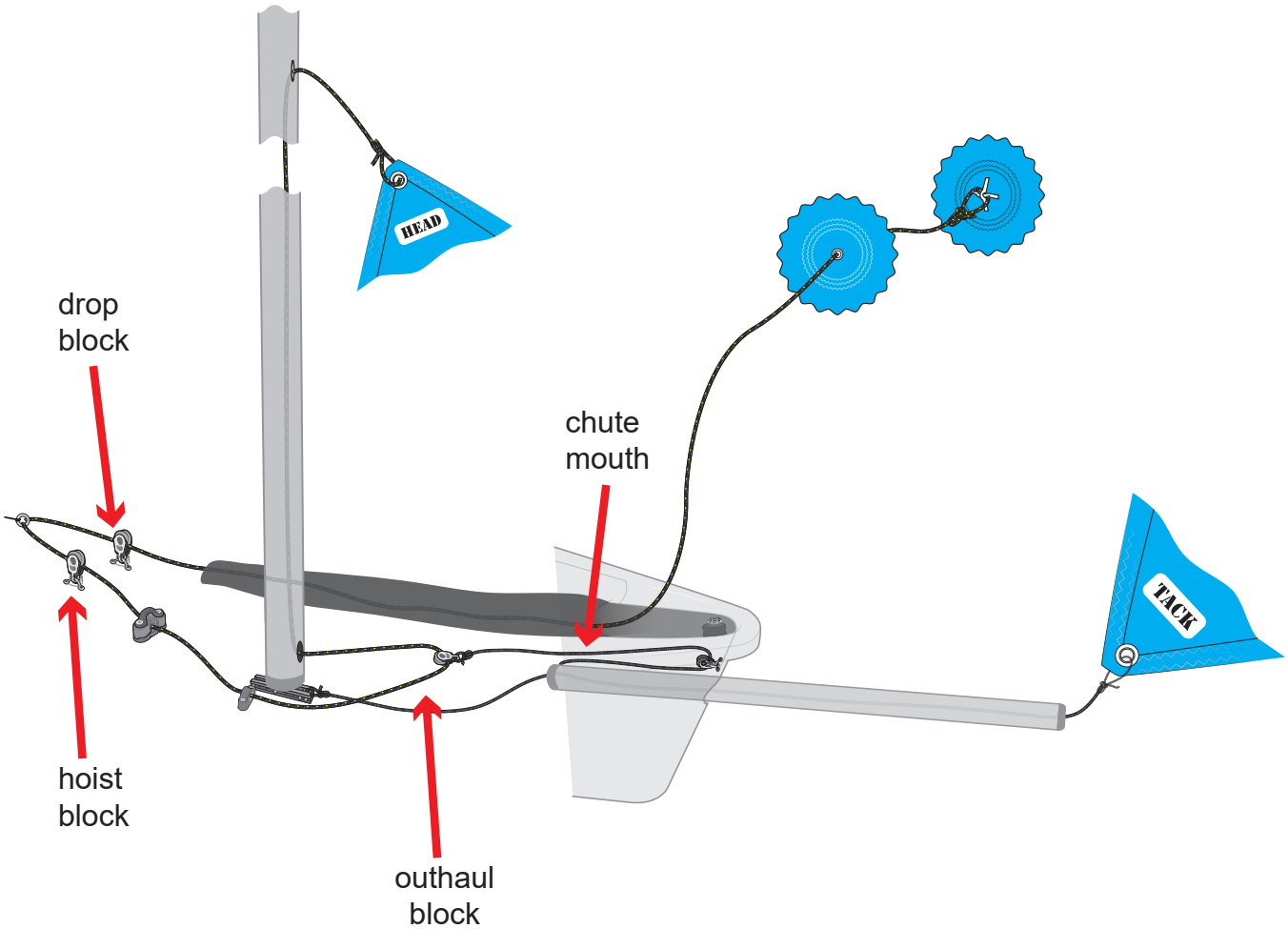

6.2 - Rigging the Gennaker

HINT

Always remember to tie a piece of rope to the bowsprit outhaul block when fully de-rigging your RS Venture – it saves crawling up under the foredeck!

a) Unpack the gennaker.

b) Tie the tack of the gennaker to the tack line that emerges from the end of the bowsprit. The knot that is already in the tack line needs to be left in place as it determines how far the bowsprit comes out.

c) Tie the end of the gennaker halyard to the head of the gennaker.

d) Take the gennaker downhaul line (the other end of the halyard), which you previously led up the chute sock, and, with the gennaker correctly orientated on the starboard (right) side of the boat (luff forward and leech aft) pass the end through the eye on the sail from the bottom of the sail towards the top of sail.

e) Continue to run the downhaul line up the sail and tie it off on the upper patch (onto the cross of webbing)

Note: On sails made before August 2016, the gennaker downhaul line must pass through two patches on the sail before tying off on the third patch.

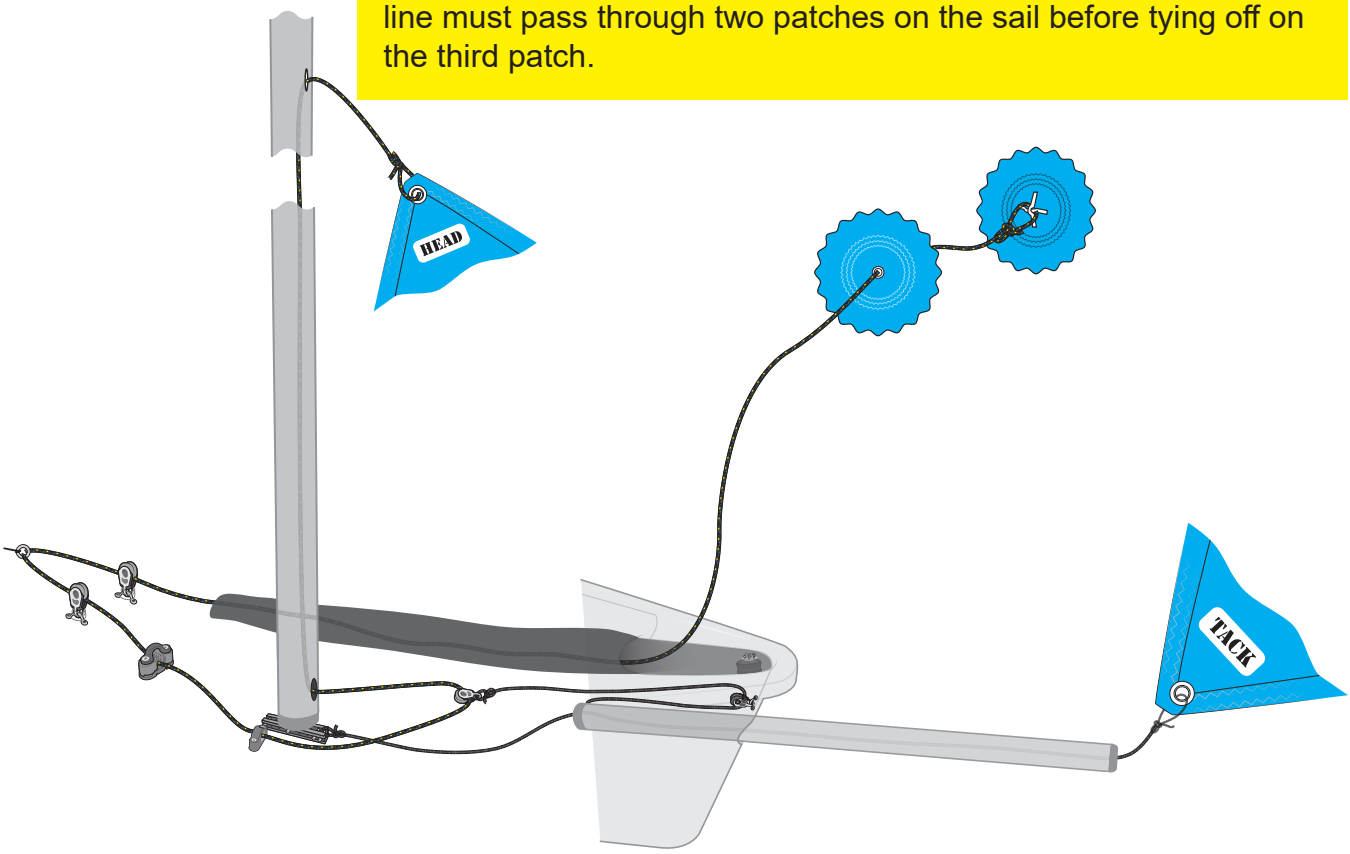

6.3 - Rigging the Gennaker Sheet

a) Find the middle of the gennaker sheet and double it over to form a loop. Attach it to the spinnaker clew using **knot #6**.

b) With the gennaker on the starboard side, thread one end of the gennaker sheet through the block by the starboard shroud adjuster plate, in the direction of the arrow on the block .

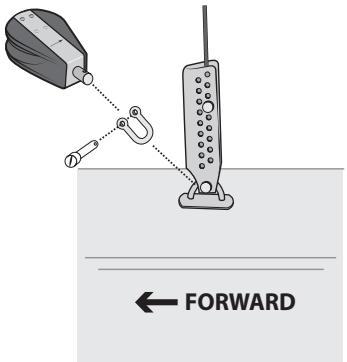

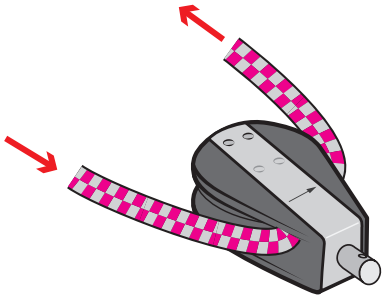

NOTE

There are 2 or 3 types of gennaker ratchet block in common use, but they all have a "correct" way to feed the sheet marked with an arrow.

c) Lead the other gennaker sheet around the jib luff and through the block on the port side. Tie the two ends of the gennaker sheet together.

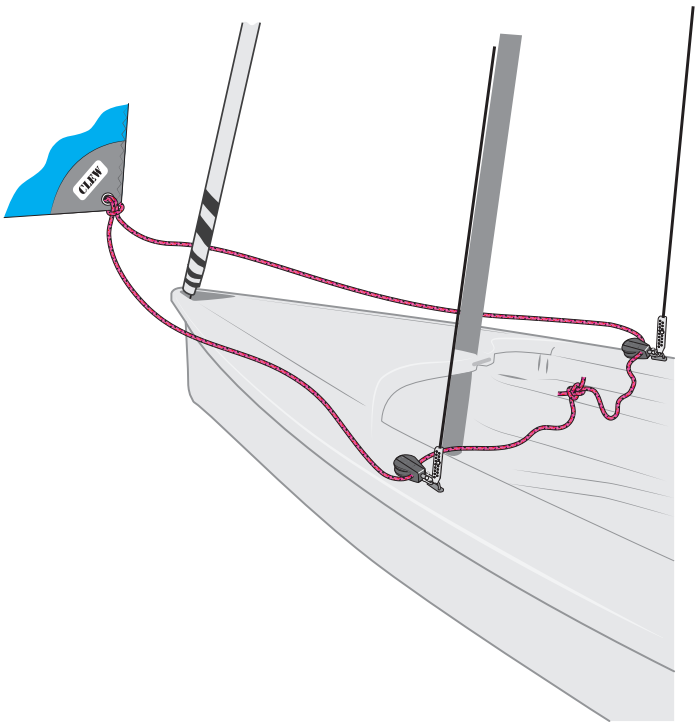

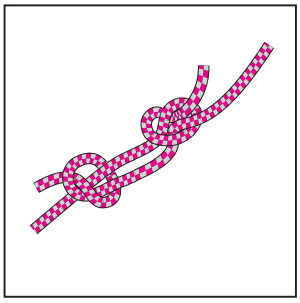

d) Pull the gennaker from one side to the other, as if you were gybing, to see if anything is twisted, and then using the gennaker downhaul, pull the gennaker down into the chute and sock.

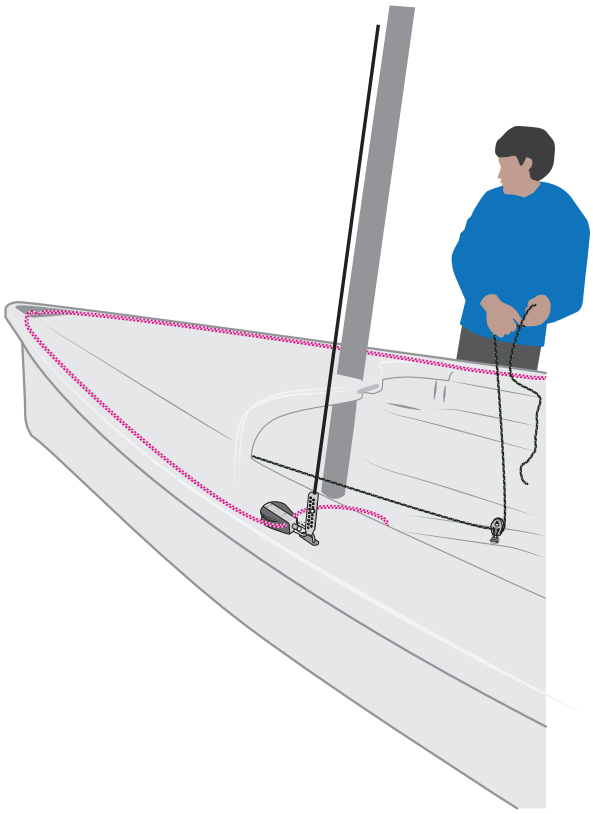

Care should be taken when dropping a new gennaker on dry land. Many sharp points on the trolley can snag and rip the stiff new sail. Ensure all Jib cotter pins and rings are taped up to reduce the chance of snagging.

RS venture connect

Rigging Guide

7 - Keel

PLEASE FOLLOW RIGGING GUIDE IN CORRECT ORDER

7.1 - Lowering the Keel

a) Before you lower the keel for the first time use electrical tape to mark a position on the crane that is level with the top of the black keel plate. This is a reference point to tell you when winding the keel back up you have reached the top.

If you keep winding once the keel is fully raised you risk damaging the boat.

b)

Make sure the boat is in deep enough water.

Lower the keel using the keel hoist.

Never let go of the handle, even if broached!

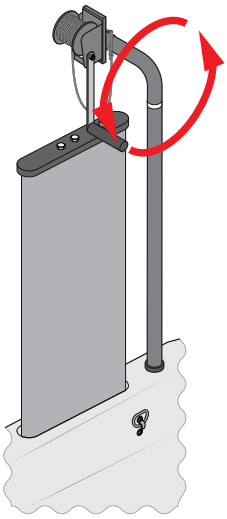

c)

The keel should go fully down and the lifting wire will go slack.

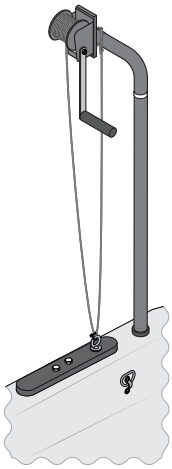

d)

Remove the shackle from the lifting eye on the keel.

Replace the shackle on the lifting wire so you don't lose it.

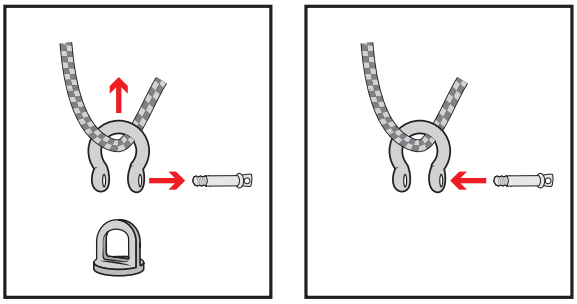

7.1 - Lowering the Keel

e)

Add the Veclro strap through the lifting eye of the keel.

It is very important to make sure the keel is locked down. Make sure the strap is tight.

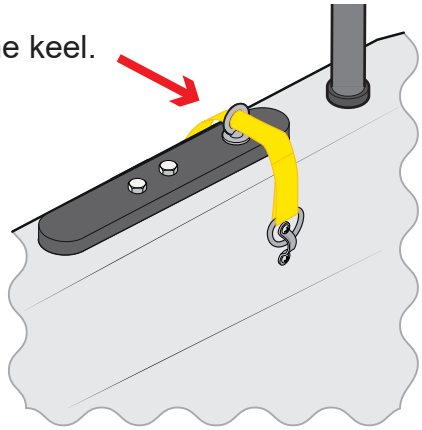

f)

Take up any slack in the keel hoist then remove the keel hoist.

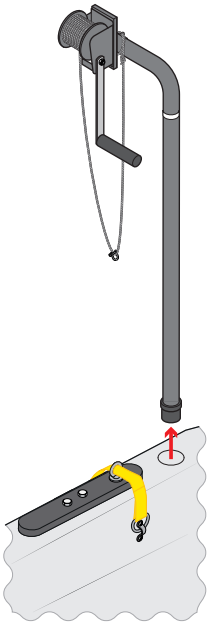

Refer to the Safety Instructions at the begining of this document regarding securing the secondary keel restraint. Do not go sailing unless the keel retaining device is not securly attached

RS venture connect

Rigging Guide

8. Rudders

To complete this section, you will require:

- Rudder x 2
- Com bar
- Tiller extension

PLEASE FOLLOW RIGGING GUIDE IN CORRECT ORDER

8.1 - Fitting the Rudders

a)

In the rudder pack you will find two rudders, tillers, com bar, tiller extension and four small flathead screws.

If required, insert the tiller into the stock. Line up the holes, **making sure that the tiller extension joint is on the top of the tiller**, Then attach using the screws provided.

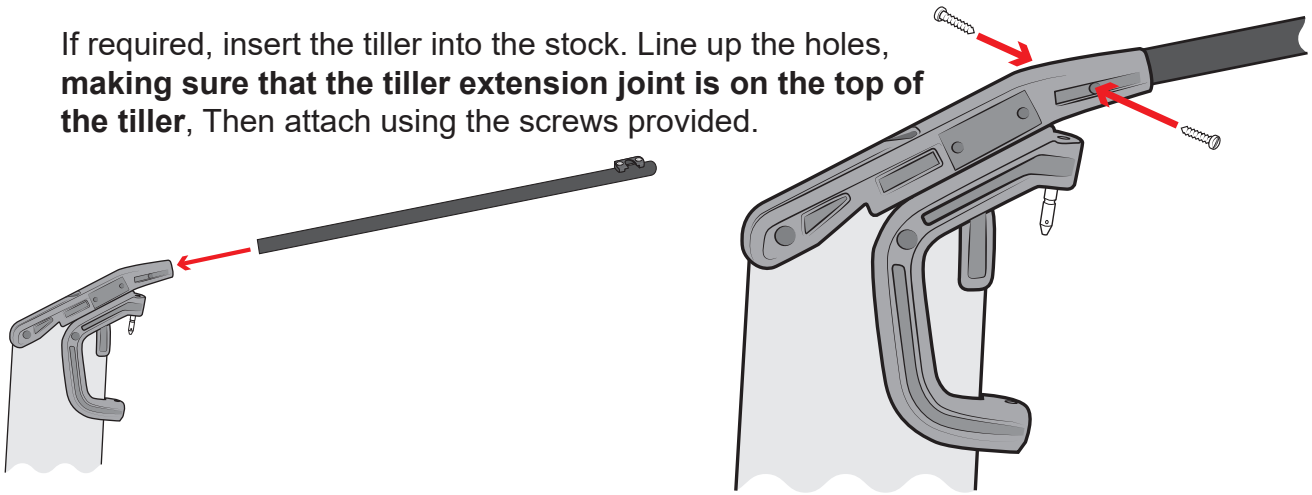

b) To fit the rudder, simply line up the pins (pintles) with the holes (gudgeons) on the rudder stock and transom of the boat and push down until the retaining clip 'clicks' into place. The rudder may be difficult to get on at first, but all it will need is a simple waggle from side to side whilst pushing down.

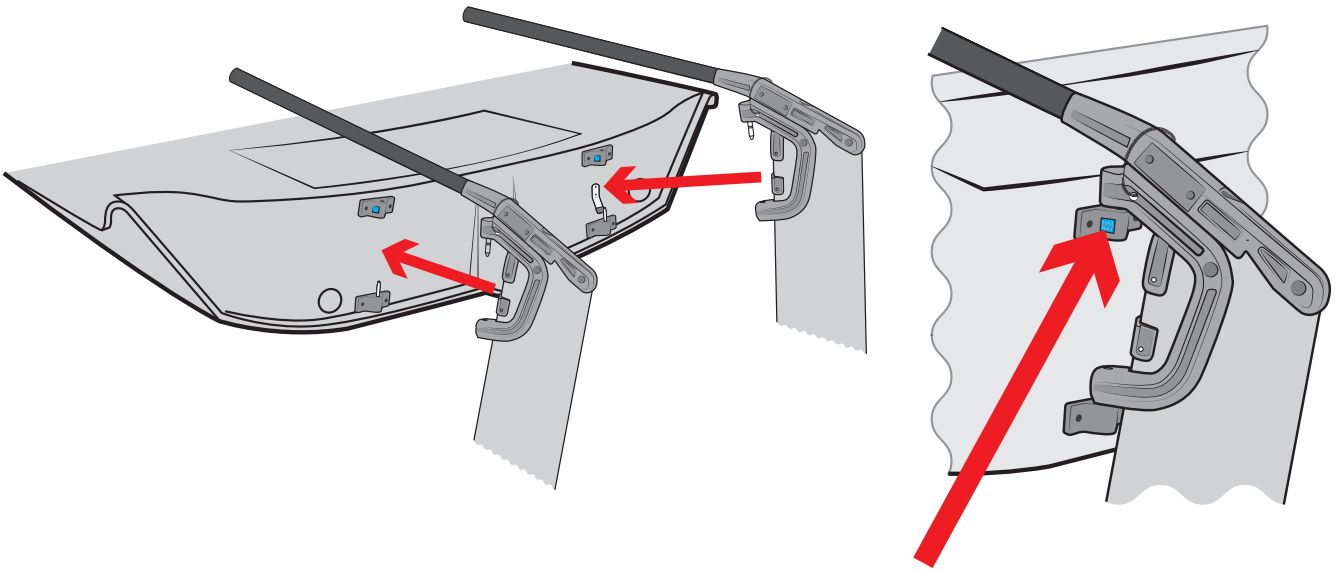

To remove the rudder, simply push the retaining clip in and pull up on the rudder stock.

c) Add the com bar, joining the two tillers.

8.1 - Fitting the Rudders

d)

Add the tiller extension

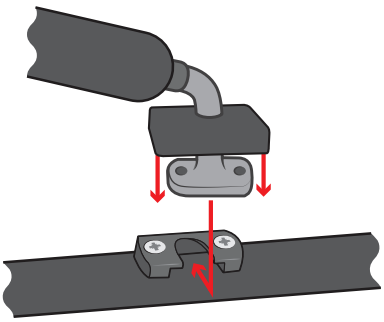

To put the rudder down -

1. Lift the tiller slightly to unlock the blade.

2. Push the tiller aft until the blade is fully lowered (it will normally ‘clunk’ into the front of the rudder stock).

3. Push the tiller firmly down to ‘lock’ the blade.

To pull the rudder up -

1. Lift the tiller slightly to unlock the blade.

2. Pull towards you (into the boat) until the blade reaches it’s maximum up position.

3. Push the tiller gently down to hook over the top of the stock.

Do not paddle with the rudder half up.

As a safety feature the rudder will unlock and come up if it hits the bottom.

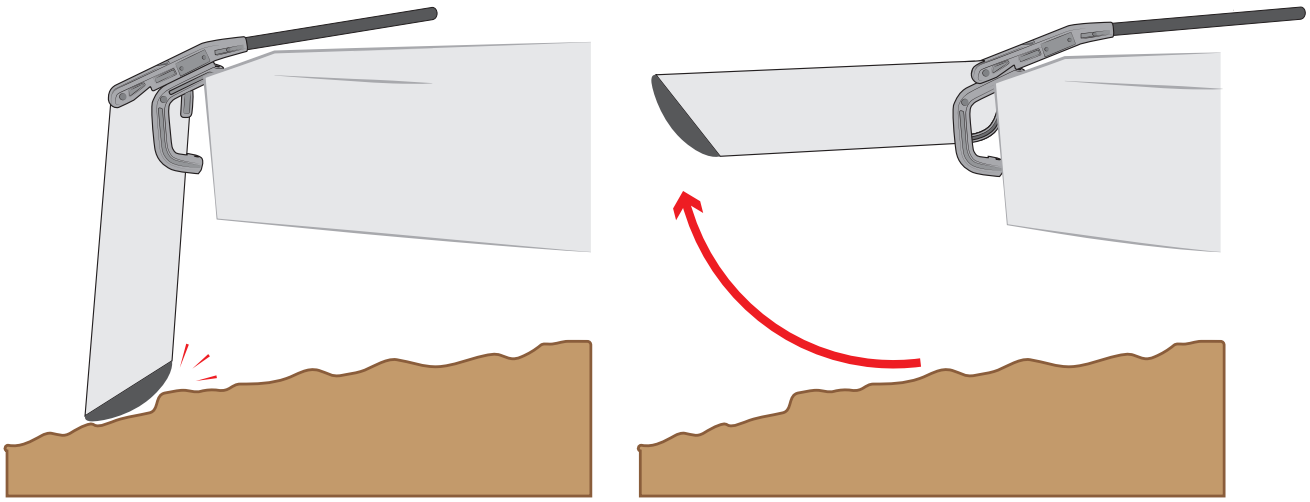

RS venture connect

Rigging Guide

9. Reefing

PLEASE FOLLOW RIGGING GUIDE IN CORRECT ORDER

9.1 - Rigging the Reefing Line

Reefing enables the less-experienced or younger sailor to continue sailing in stronger winds. Your RS Venture is fitted with a single-line reefing system. The reefing line is red and is installed in the boom ready to rig through the sail. You will see it either end of the boom, next to the outhaul line, which is usually black. At the front end of the boom the reefing and outhaul lines share the same block, as they do not need to be pulled on at the same time.

Please follow the instructions for reefing, ensuring that the reefing line is threaded the correct way through the mainsail. One person may reef the mainsail while sailing on a gentle close reach, sails eased, on a starboard tack.

Make sure you are in plenty of clear water while reefing.

a)

Ease the reefing line right out from the outboard (clew) end of the boom. Lead the clew reefing line up the starboard side of the mainsail leech, pass it through the top reefing eye. Lace the reefing line through the remaining reefing eyes – (through one, out of one) and tie a #3 knot in the end. Slide the knot into the boom track make sure the knot is large enough to remain secure.

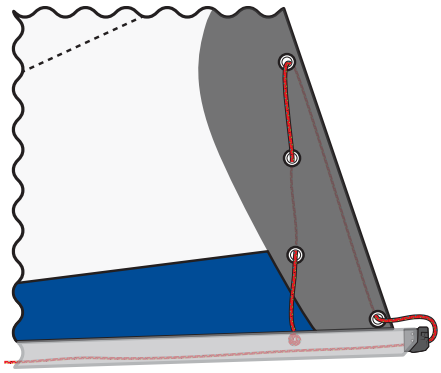

Lead the tack line up the port side of the mainsail, through the reefing eye, and back down the starboard side of the mainsail. Tie a stopper knot in the end, and hook the tack line in the recess on the port side of the gooseneck.

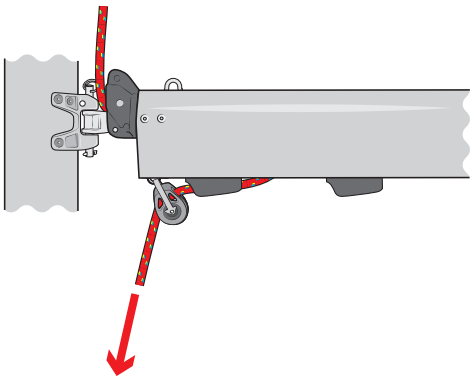

9.2 - Reefing the Mainsail

a)

With the mainsheet uncleated, fully ease the kicker and drop the main halyard so the reefing cringle is 10cm above the gooseneck.

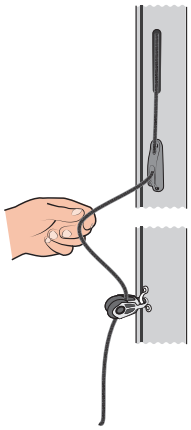

b)

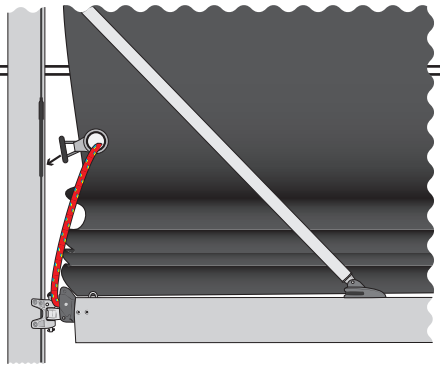

Make sure the reefing clew slug is inserted into the
track on the mast.

c)

Steadily pull on the reefing line from the front end of the boom. This, as you can see from the pictureabove the sail will start to concertina

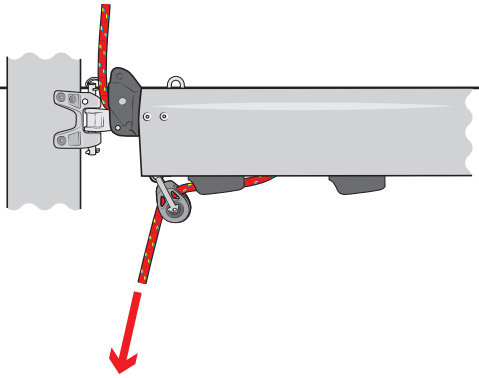

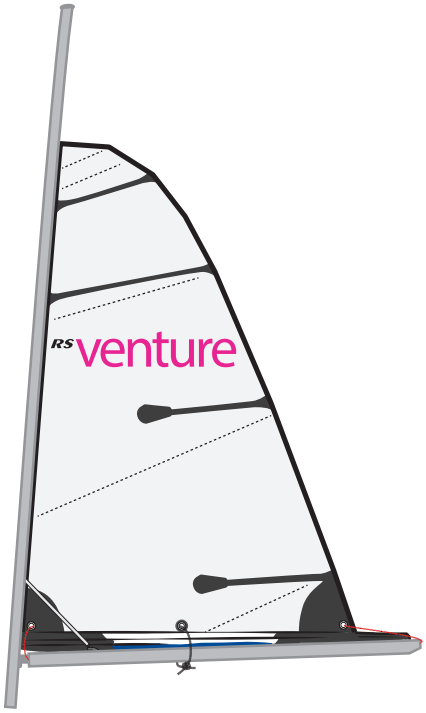

When the reefing position is lowered down to the boom. Tie a sail tie through the cringle in the middle of the sail and around the boom with a reef knot. Now fully tension the halyard again to get sufficient tension in the luff of the mainsail.

Finally re-tension the kicker for some control of the leech.

HINT

The jib is a very effective strong wind sail area because it is low down and maintains a balanced helm. So slab reef before you lose the jib – it's more fun for the crew!

RS venture connect

Seated Control System V5

For fitting the SCS kit to an existing RS Venture Connect

PLEASE FOLLOW RIGGING GUIDE IN CORRECT ORDER

If the SCS kit has already been added, see the notes at the start of each section.

10.1 - SCS Pack Contents

	Dacron patches	2
	30mm block for spinnaker takeup	1
	Rings	2
	Elastic for strop	2
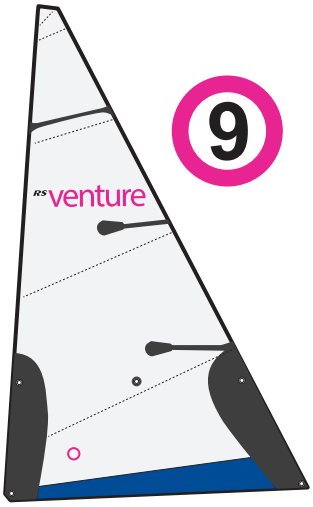	Size 9 mainsail	1
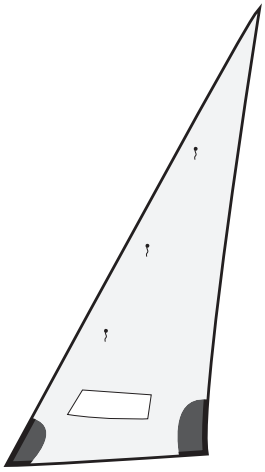	Storm jib	1
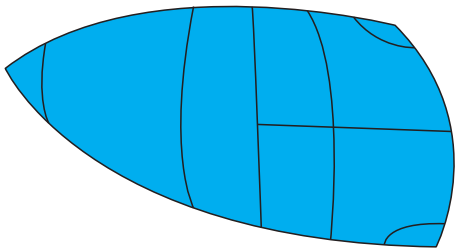	Storm spinnaker	1

10.1- SCS Pack Contents

	control line cleats	2
	control line elastic	2
	control line block	2
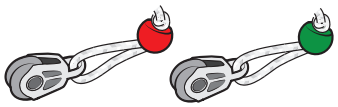	control line block with rope and bobble	2
	gnav control line block	2
	gnav control line rope	2
	downhaul control line block	2
	downhaul control line rope	2
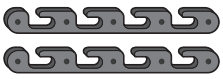	toe rail set	4
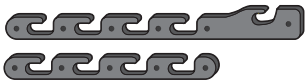	seat rail set	4
	toe rails	2
	seats	2
	seat cleats	2
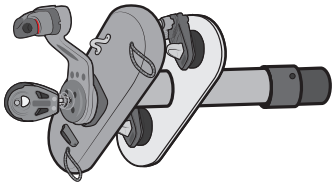	plinth	1
	quick fire rope	1
	quick fire block and strop	1
	quick fire handle	1

10.1 - SCS Pack Contents

	jib barrels	2
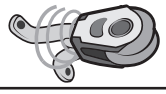	jib 30mm block with spring	2
	30mm jib sail block	2
	jib strop for blocks	1
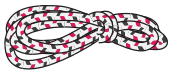	jib sheet	1
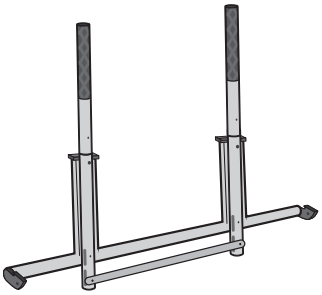	steering gear	1
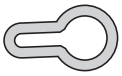	Q-clip	2
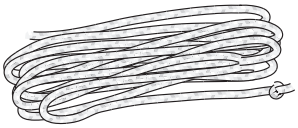	steering line kit	1
	steering line organiser (aft cockpit)	2
	steering line organiser (aft gunwale)	4
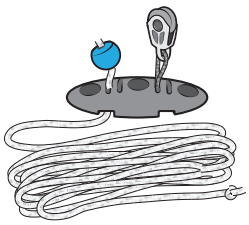	steering line organiser (front cockpit)	2
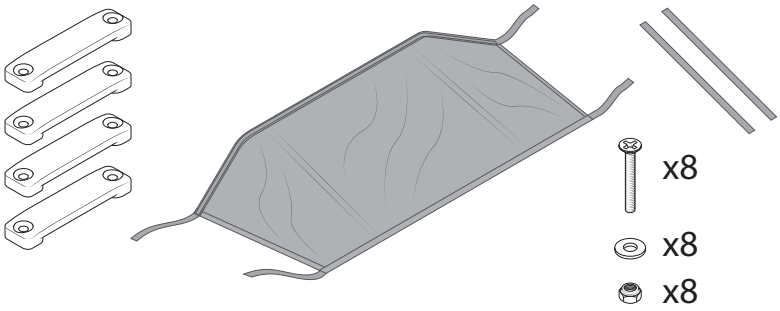	Mainsheet Cover Kit	1

This manual assumes that you are starting with a fully rigged RS Venture Connect.

There are some fittings on the RS Venture Connect that are obsolete once the SCS kit is added. You can remove them at this point.

If your boat has the SCS kit already fitted you should skip this section.

RS venture connect 11 - Removing Old Fittings

a)

Unthread the gnav control line from the cleat on the mast.

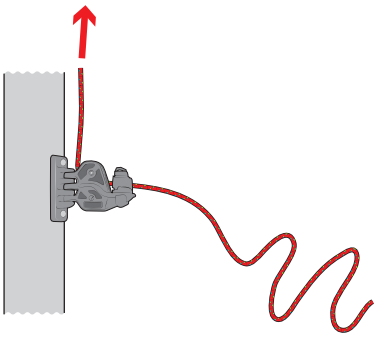

b)

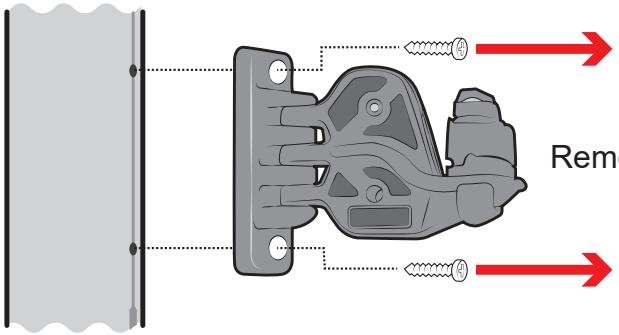

Remove the gnav control line cleat from the mast

c)

Completely remove the downhaul line from the boat.

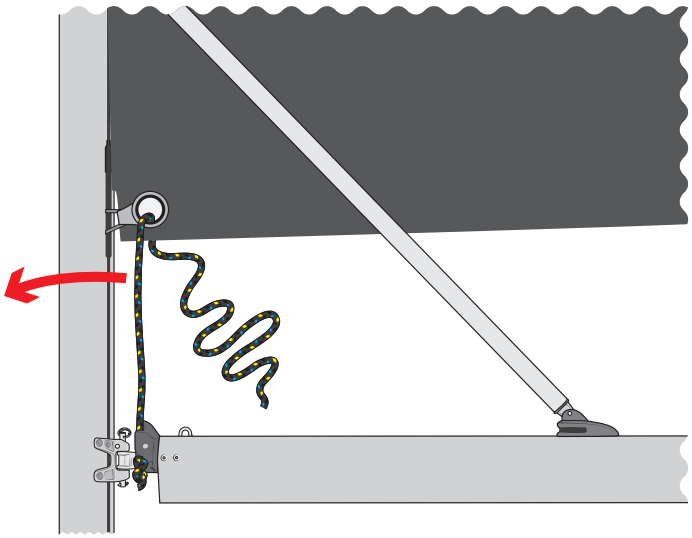

RS venture connect

Seated Control System

12. Control Lines

If your boat has the SCS kit already fitted you should skip this section.

PLEASE FOLLOW RIGGING GUIDE IN CORRECT ORDER

12.1 - Adding Control Line Cleats to the Foredeck

a)

There are 3 machine screws already on each side of the foredeck to attach the control line cleats.

Remove the nuts from beneath the foredeck (taking note of which bolt the p clip is attached to) then remove the machine screws.

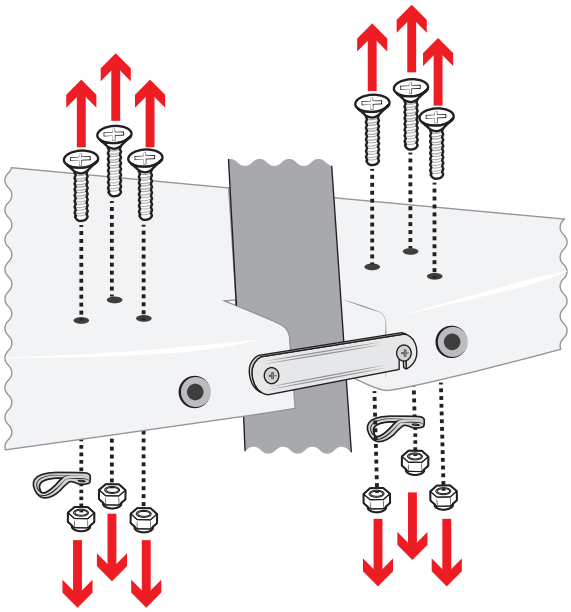

b)

Add the two control line cleats to the foredeck using the machine screws and nuts you removed in **step a**.

You will have to rotate the top part of the cleats to allow you to get the machine screws in.

Make sure you add the p clip to the bottom of one of the bolts on each side of the boat.

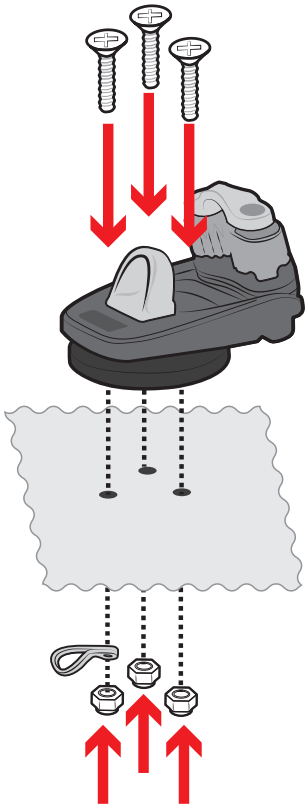

You may have to remove two small grub screws from the cleat to allow it to rotate freely.

Make sure that all nuts are on tightly.

12.2 - Adding Control Line Takeaways

In the SCS kit you will find the elastic control line takeaway and two 20mm blocks.

a)

Tie one of the blocks onto one end of the elastic with **knot #2**.

b)

There is a metal ring attached to an eyelet on the underside of the forestay U-bolt fitting. Take the loose end of the takeaway elastic and pass it forwards through this metal ring and then bring it aft again.

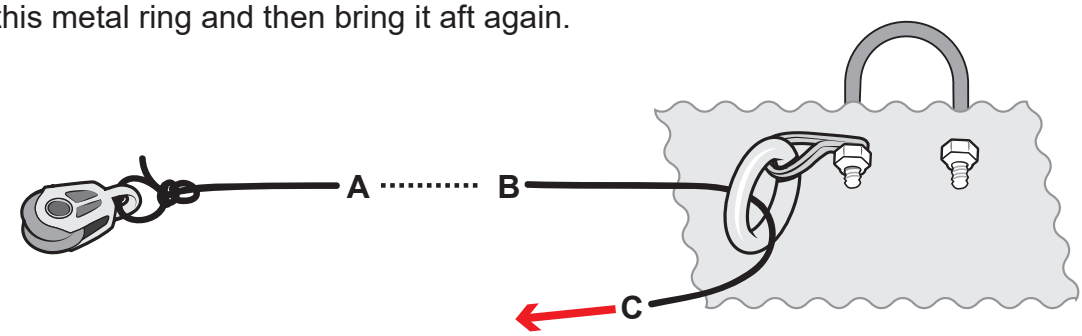

c)

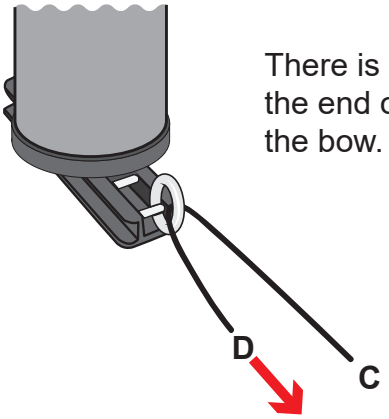

There is another metal ring on the front bolt of the mast step. Pass the end of the elastic through this ring, then forward again towards the bow.

d)

Pass the end of the elastic back through the metal ring under the forestay U-bolt (don't let go!), then tie the other v to the end with **knot #2**.

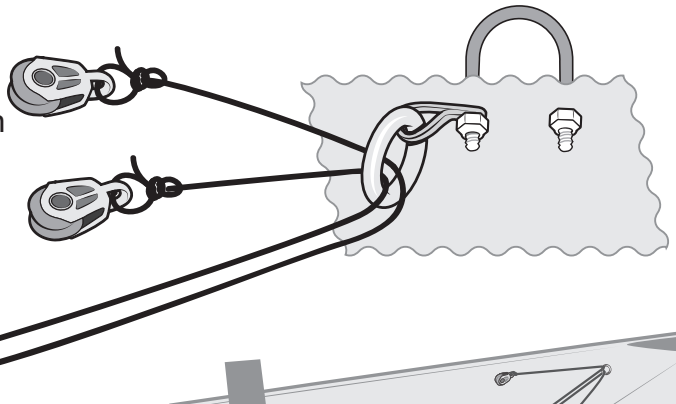

from mast step ring C D

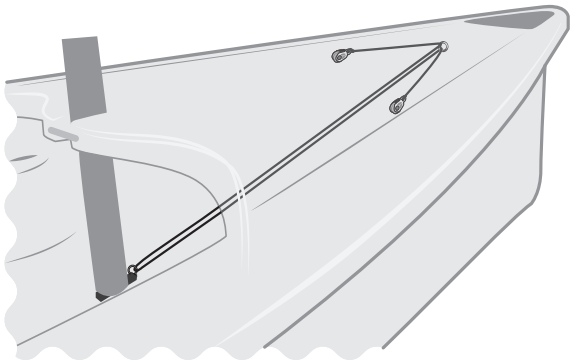

12.3 - Adding the Gnav Control Line

a) Locate the following components in the SCS kit:

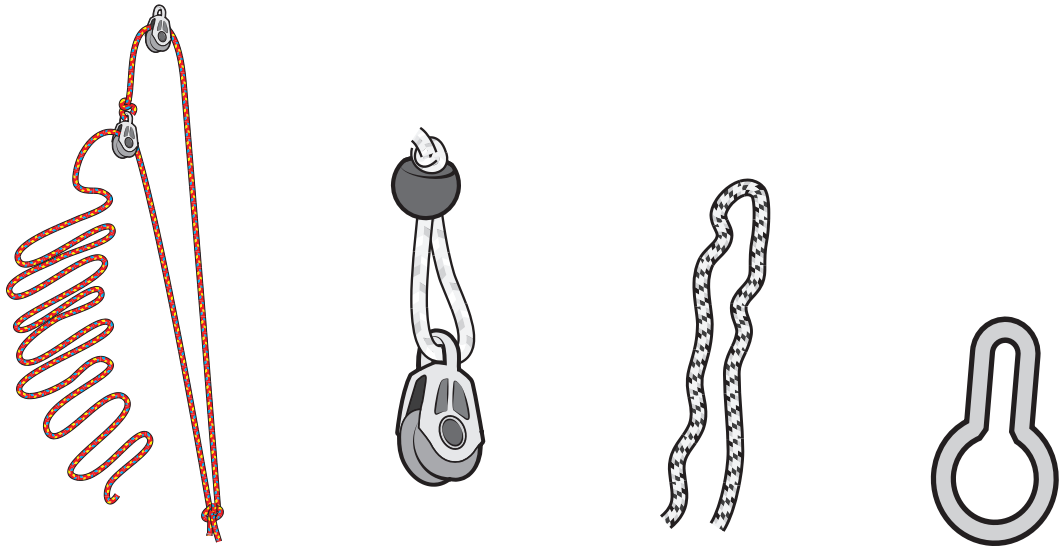

Gnav control line | Gnav control line block | Qloc tie | Qloc

b)

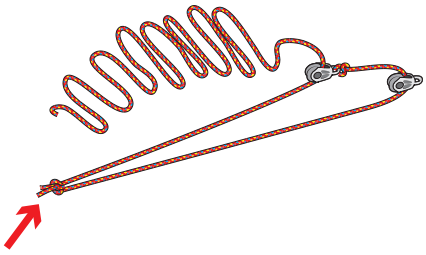

Tie these two ends of the gnav control line to the eyelet on the floor of the cockpit, just to port of the mast step.

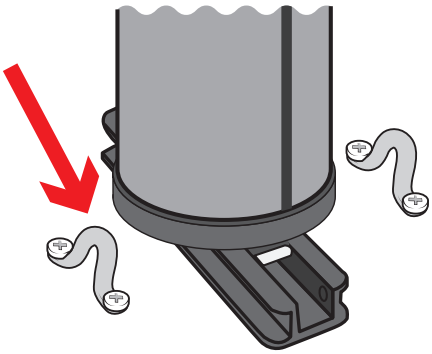

c)

Take the loose end of the gnav control line and feed it through the port cleat on the foredeck as shown.

Make sure the rope goes the right way through the cleat.

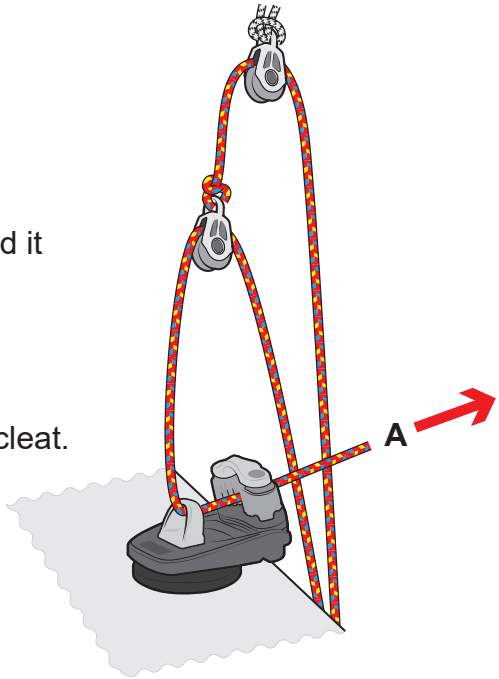

12.3 - Adding the Gnav Control Line

d)

Pass the loose end through the block.

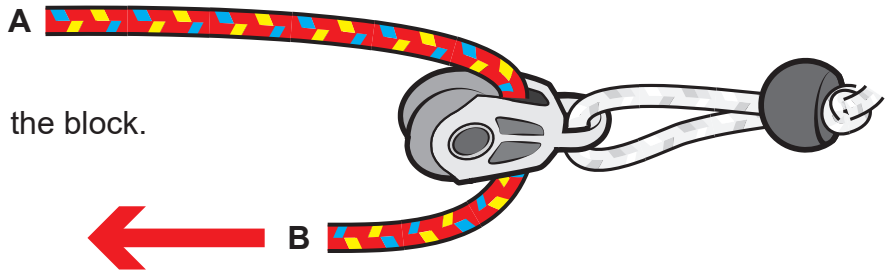

e)

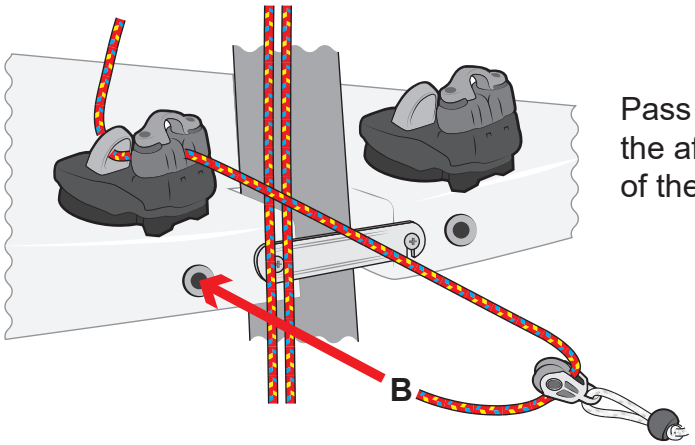

Pass the end forwards through the hole in the aft edge of the foredeck, to the port side of the mast gate.

f)

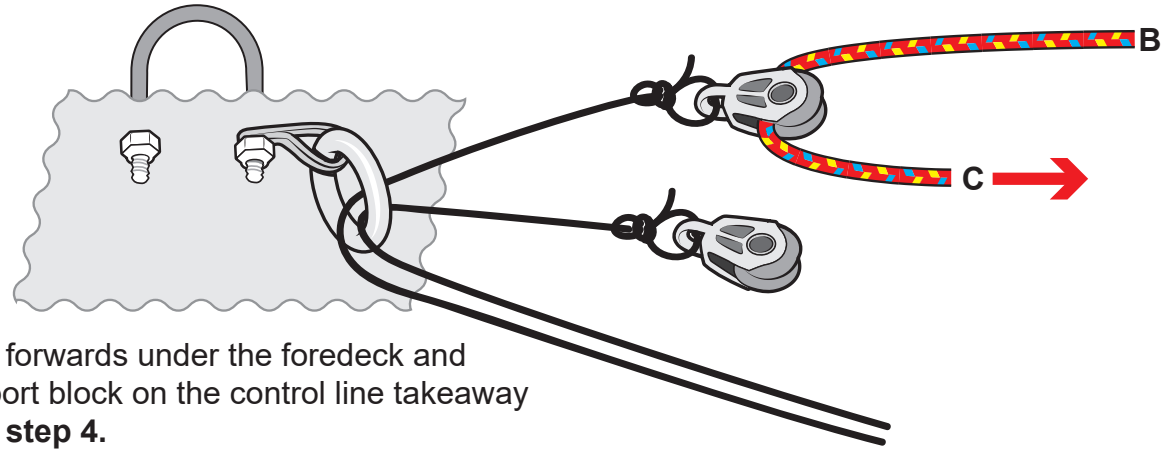

Pass the line forwards under the foredeck and through the port block on the control line takeaway you added in **step 4.**

g)

Pass the end aft again and tie it to the eyelet on the underside of the gnav control line cleat.

You only need to complete steps **a - g** once as the control line can be left like this when the boat is de-rigged.

12.3 - Adding the Gnav Control Line

h)

Locate the upper block on the gnav control line behind the cleat (to the port side of the mast).

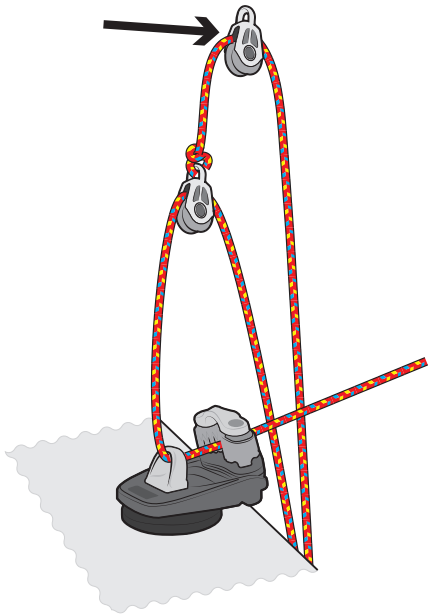

i)

Take the Qloc tie and attach both ends of it to this block using 2 x **knot #1**.

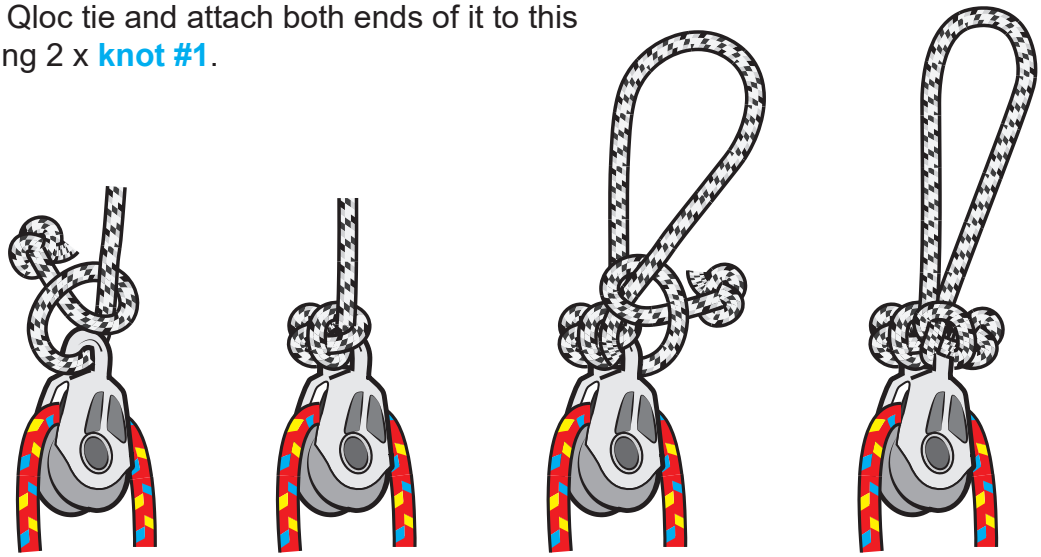

j)

Attach the Qloc to the loop as shown.

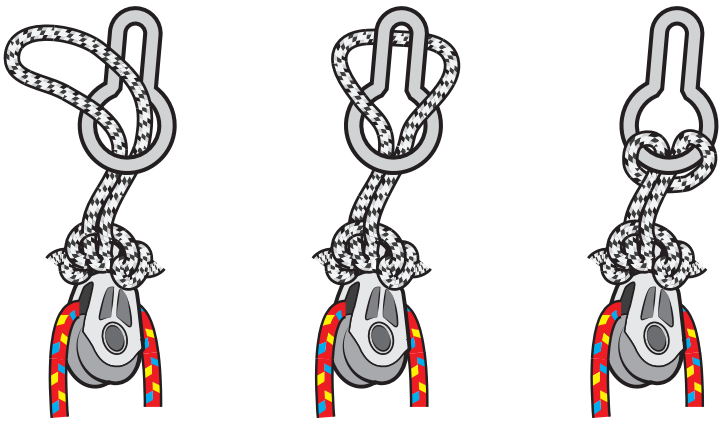

12.3 - Adding the Gnav Control Line

k) Take the tail of the main gnav control line (which you unthreaded from the cleat on the mast in **step 2a**) and tie **knot #3** in the end.

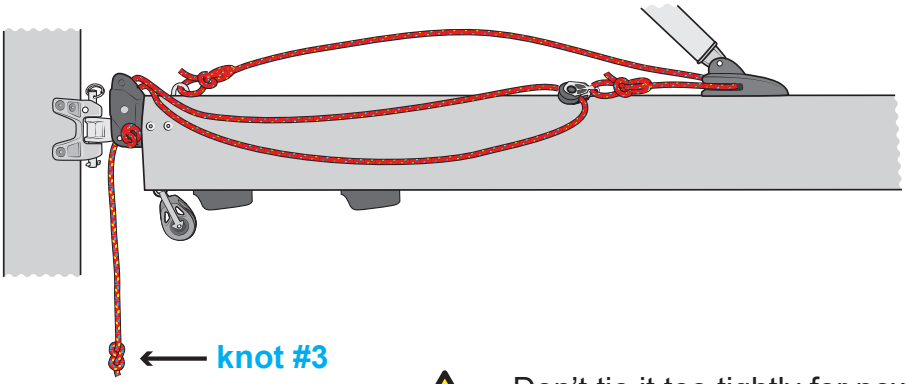

Don't tie it too tightly for now as you will need to adjust the knot position in a later step.

l)

Hook the Qloc onto the figure of eight

m)

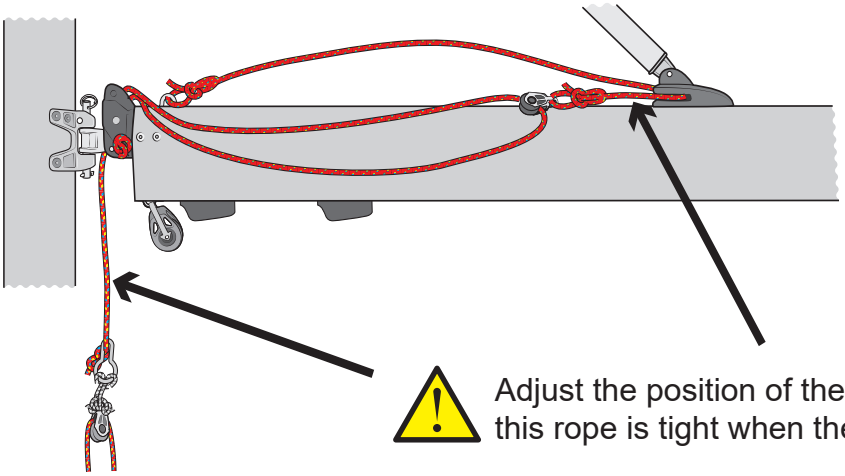

Adjust the position of the figure of eight so that this rope is tight when the gnav is fully extended.

n) Once you are happy with the location of the knot, cut off any excess tail and seal the end with a lighter.

Leave the gnav control line as it is for the moment and continue to work through this guide in order. The control line will need to be attached to the center console (**section 5**) before it can be used.

12.4 - Adding the Downhaul Control Line

a) Locate the following components in the SCS kit:

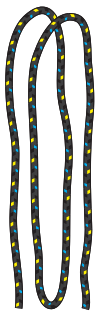

Downhaul

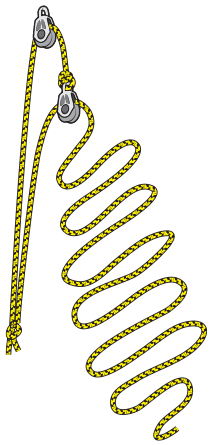

Downhaul control line

Downhaul control line block

Qloc tie

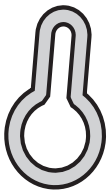

Qloc

b)

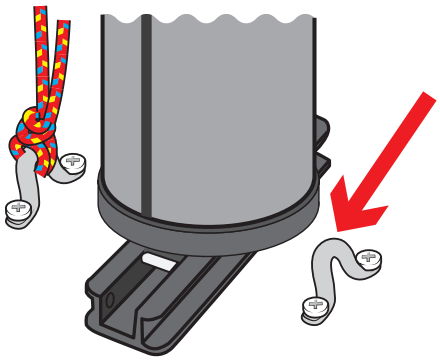

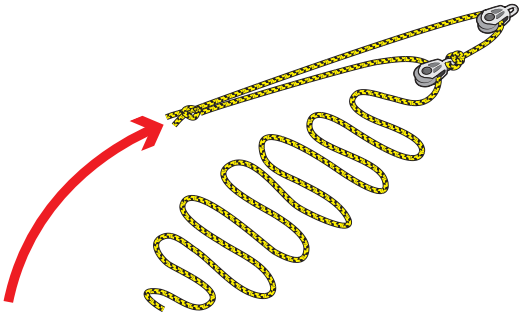

Tie these two ends of the downhaul control line to the eyelet on the floor of the cockpit, just to starboard of the mast step.

c)

Take the loose end of the downhaul control line and feed it through the starboard cleat on the foredeck as shown.

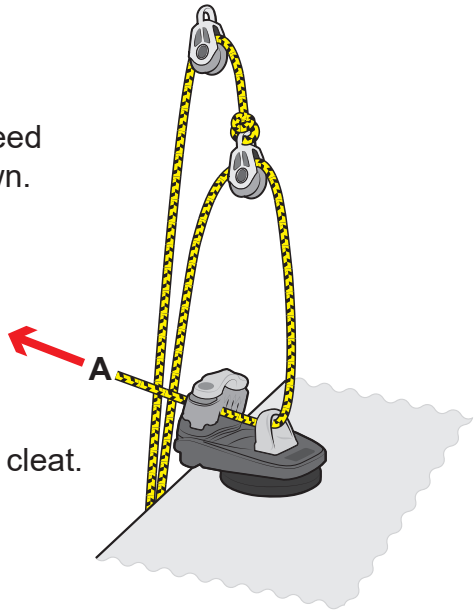

Make sure the rope goes the right way through the cleat.

12.4 - Adding the Downhaul Control Line

d) Pass the loose end through the block.

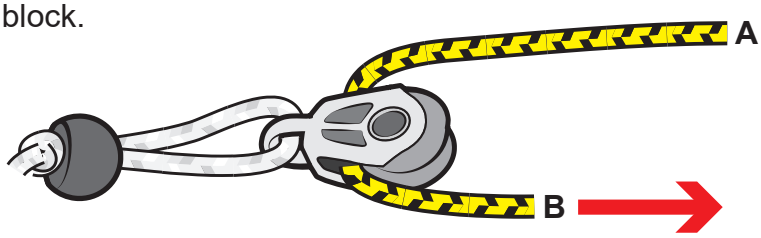

e)

Pass the end forwards through the hole in the aft edge of the foredeck, to the starboard side of the mast gate.

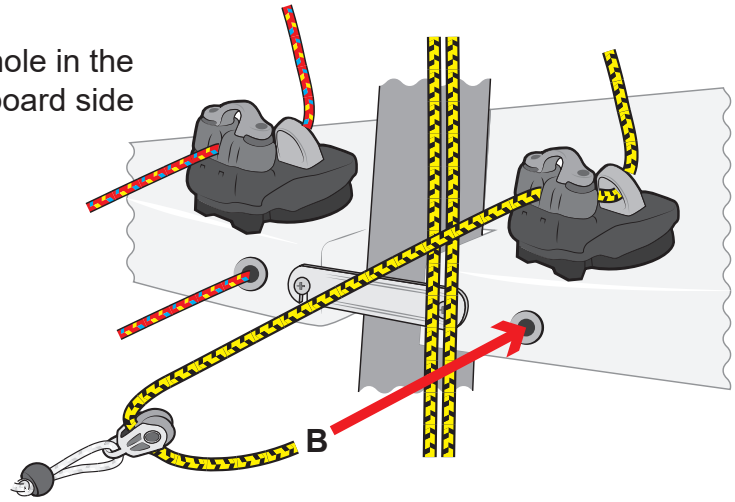

f)

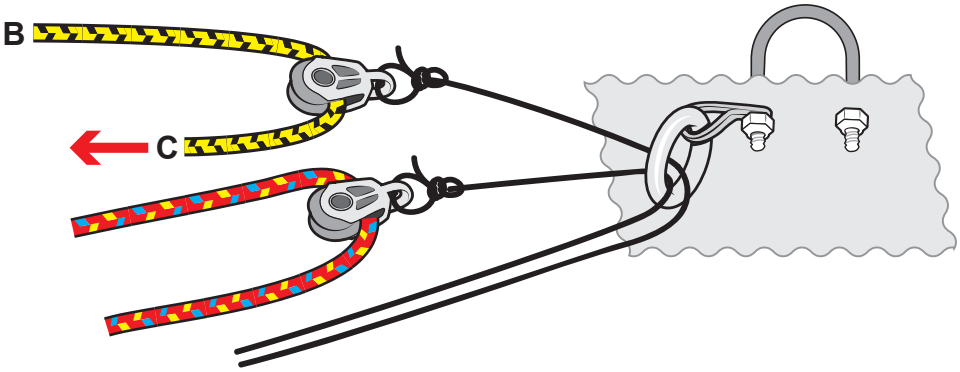

Pass the line forwards under the foredeck and through the starboard block on the control line takeaway you added in **step 4.**

Make sure the elastic takeaway is not twisted around itself.

g)

Pass the end aft again and tie it to the eyelet on the underside of the downhaul control line cleat.

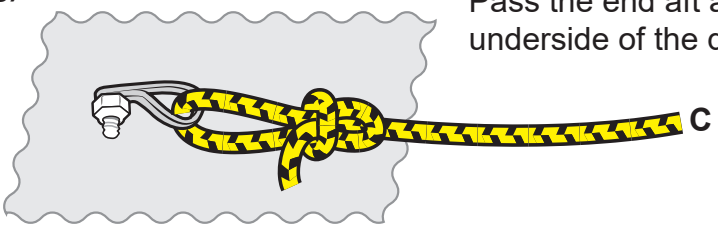

12.4 - Adding the Downhaul Control Line

h)

Tie **knot #3** in one end of the downhaul.

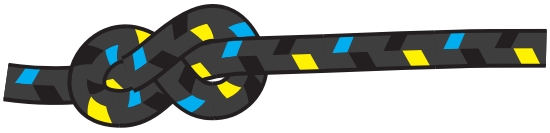

i)

Pass the other end through the cleat on the port side of the mast and tie **knot #3** in the tail.

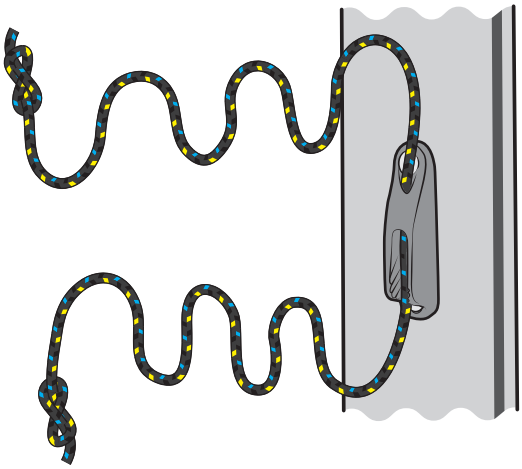

j)

Locate the top block on the downhaul control line

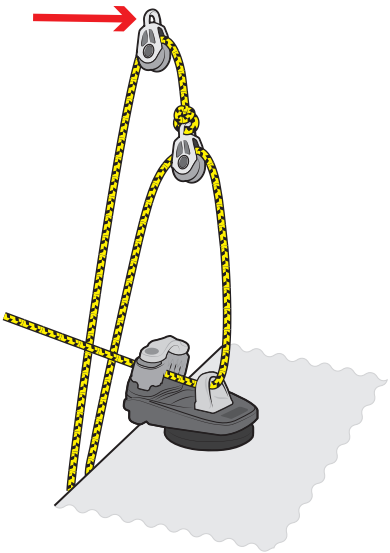

k)

Take the Qloc tie and attach both ends of it to this block using 2 x **knot #1**.

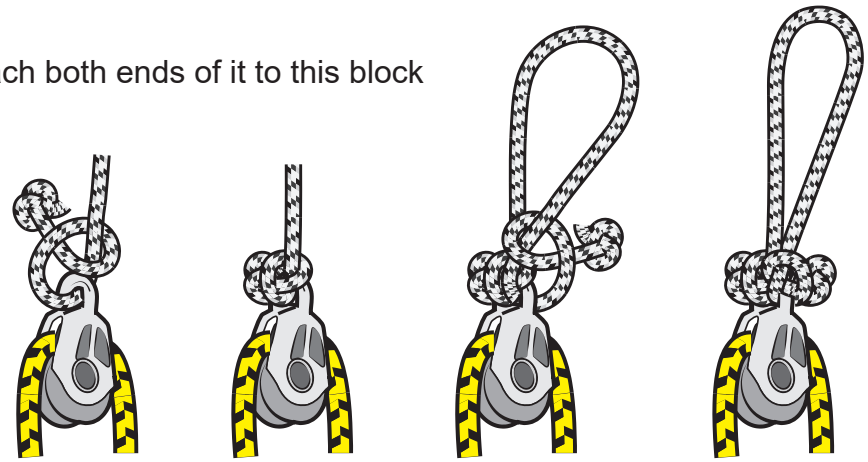

12.4 - Adding the Downhaul Control Line

l)

Attach the Qloc to the loop as shown.

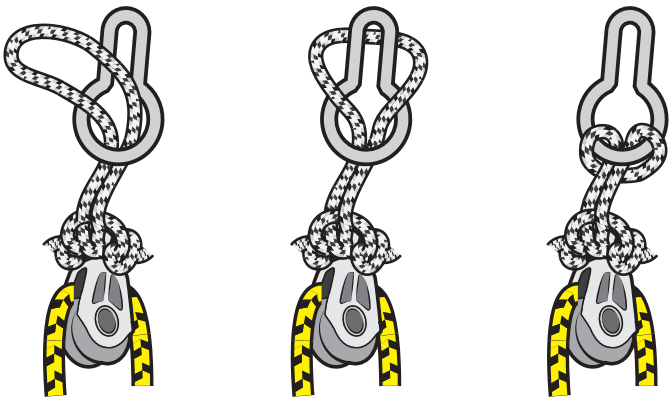

m)

Pass the end of the downhaul through the cringle in the tack of the sail.

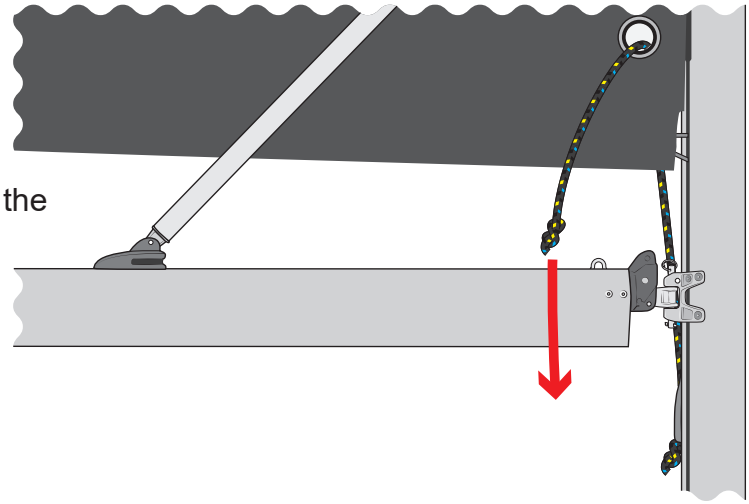

n)

Hook the Qloc onto the figure of eight knot in the end of the downhaul.

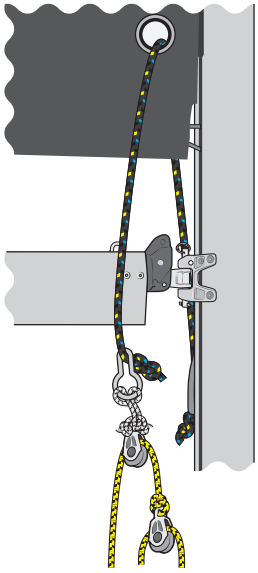

To de-rig the downhaul simply unhook the Qloc from the knot in the downhaul.

Leave the downhaul control line as it is for the moment and continue to work through this guide in order. The control line will need to be attached to the center console (**section 5)** before it can be used.

RS venture connect

Seated Control System

13. Seats

If the SCS kit has already been added, go straight to section 13.1f and section 13.3.

PLEASE FOLLOW RIGGING GUIDE IN CORRECT ORDER

13.1 - Adding the Toe Rail Inserts

a)

Remove the two eyelets and D-rings holding the velcro keel strap. Keep the screws.

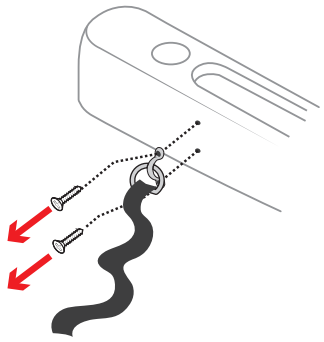

b)

Locate the toe rail inserts in the SCS kit.

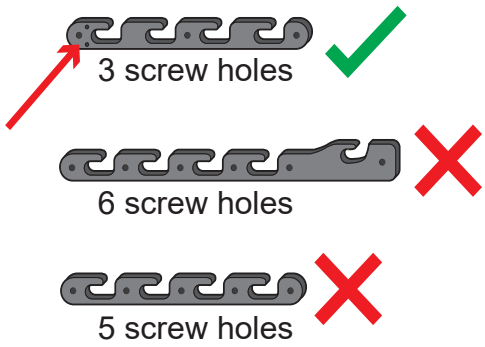

c)

Remove these twelve screws.
Don't discard them.

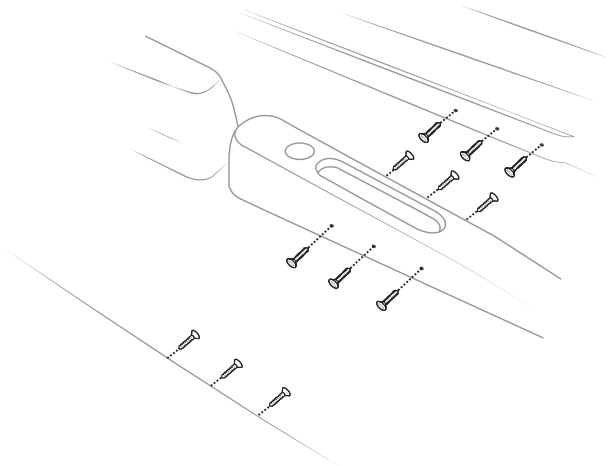

d)

Using the screws you removed in **step c**, screw the toerail inserts into the boat.

Add sealant into holes first.

Make sure thery are orientated correctly - the hooked parts must be at the top and must face aft.

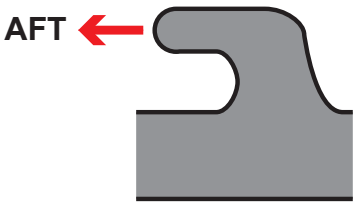

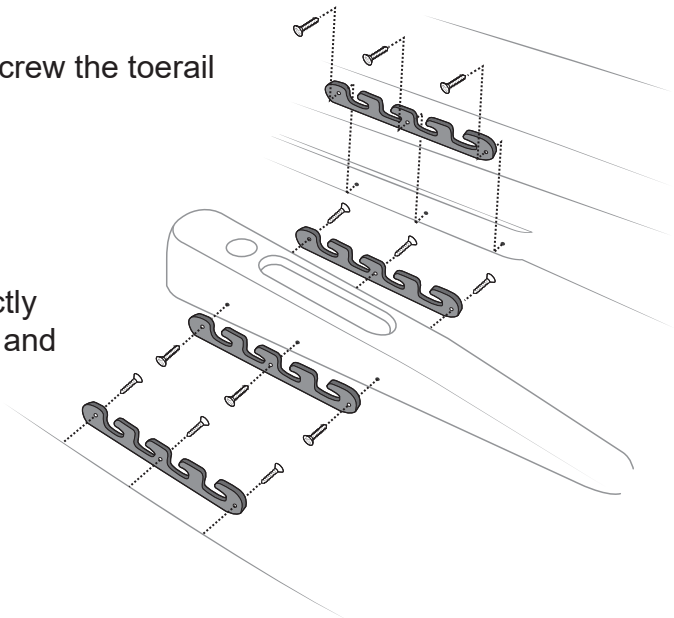

13.1 - Adding the Toe Rail Inserts

e)

Screw the eyelets holding the velcro keel strap back into place using the same screws you removed in **step a**.

Screws go into the small screw holes on the toerail insert.

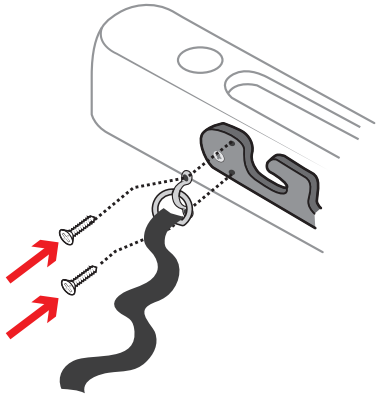

f)

Re-attach the velcro strap through the lifting eye of the keel.

It is very important to make sure the keel is locked down. Make sure the strap is tight.

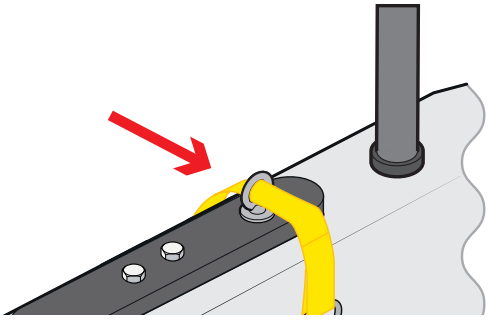

13.2 - Adding the Seat Inserts

a)

Locate the seat inserts in the SCS kit. The outboard and inboard inserts are different.

outboard

inboard

b)

Remove these 22 screws.
Don't discard them.

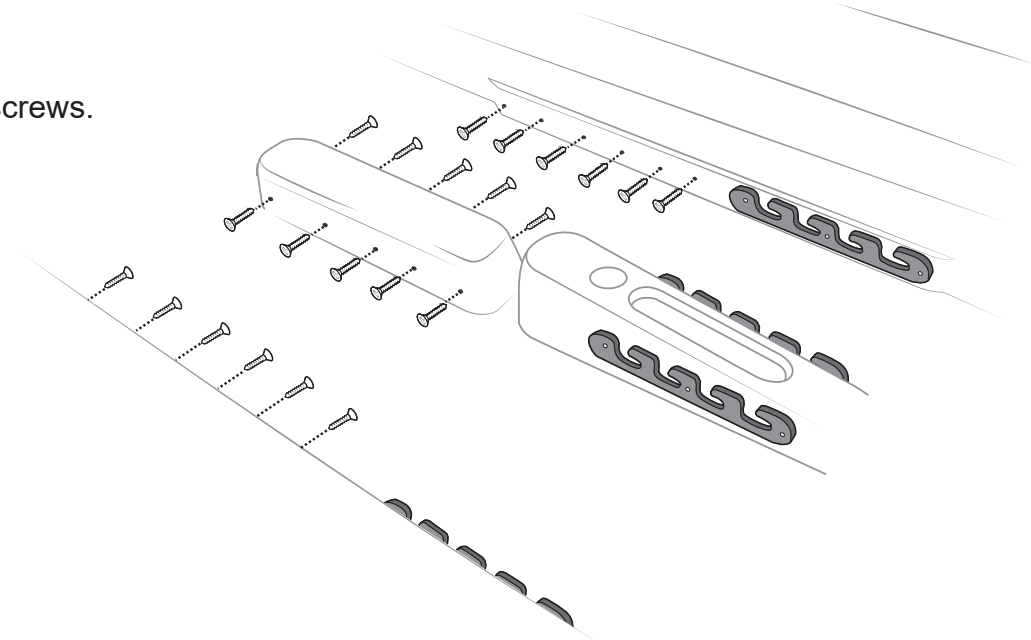

13.2 - Adding the Seat Inserts

c)

Using the screws you removed in **step b**, screw the toerail inserts into the boat.

Add sealant into holes first.

Make sure thery are orientated correctly - the hooked parts must be at the top and must face forward.

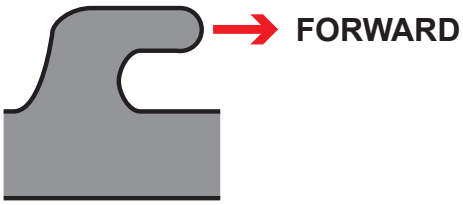

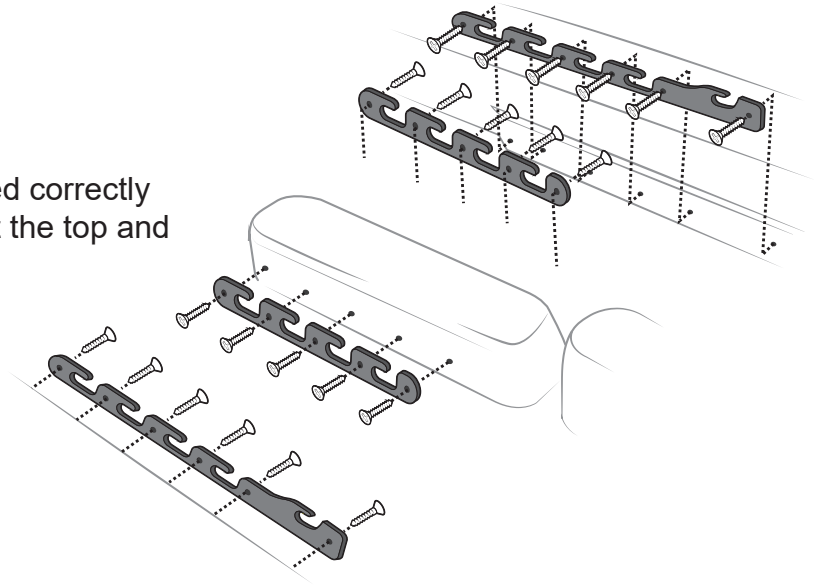

13.3 - Adding the Seats

a)

Slot the rails at the base of the seats into the brackets on the sides of the cockpit.

The seat position can be adjusted by selecting which gaps you slide the rails into.

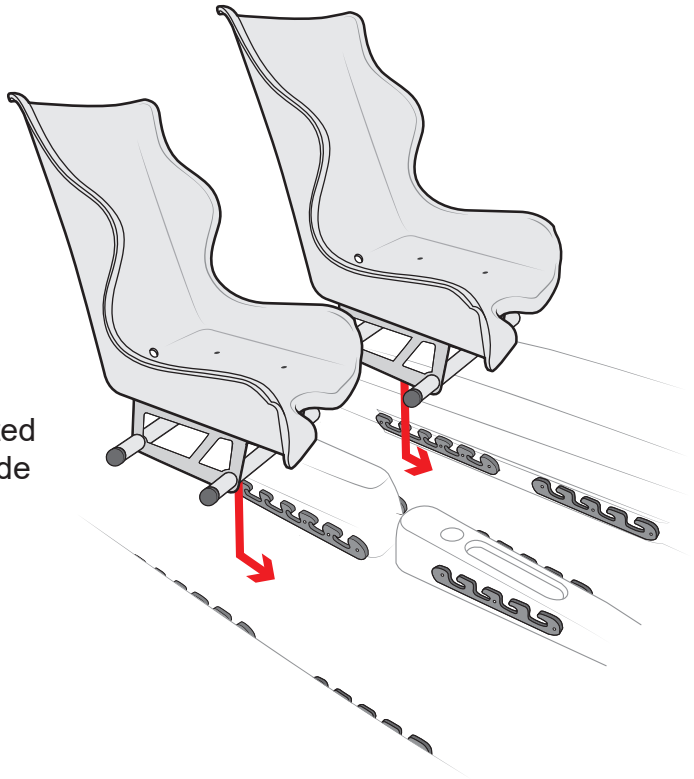

Once you are happy with the seat position, you must add the seat retainers.

13.4 - Adding the Seat Retainers

a)

Locate the 2x seat retainer lines and 2x 20mm blocks with hooks.

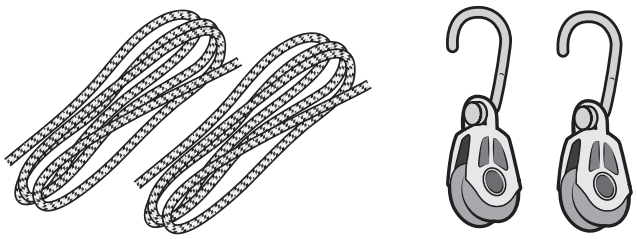

b)

There are two deck organisers with rope loops attached to the cockpit floor. These will be used to hold the seats in place.

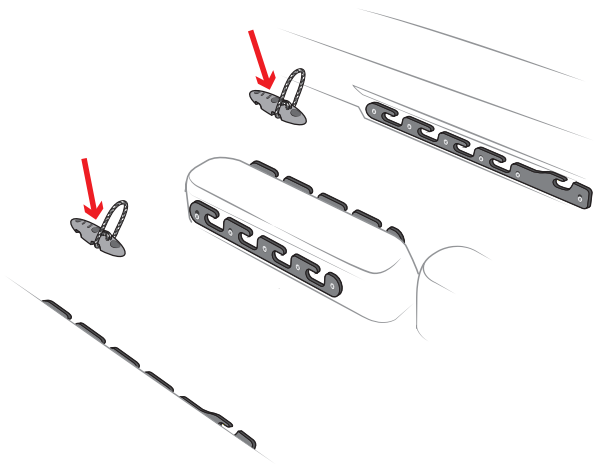

13.4 - Adding the Seat Retainers

c)

Tie one end of the seat retainer line to the P-clip (without the block on it) on the underside of the seat with **knot #1**.

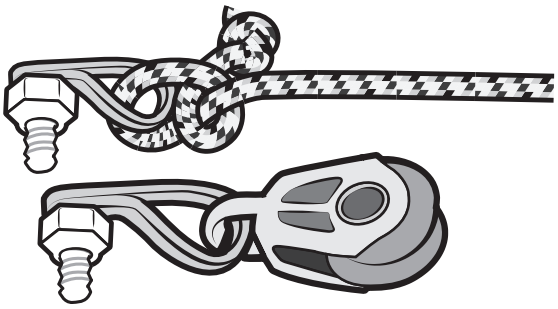

d)

Pass the other end of the seat retainer line through the block with hook attached.

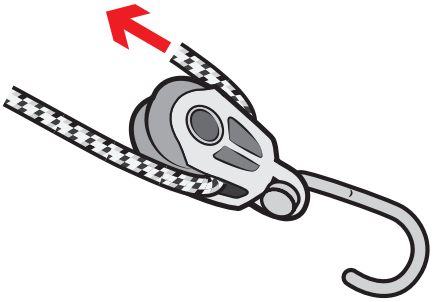

e)

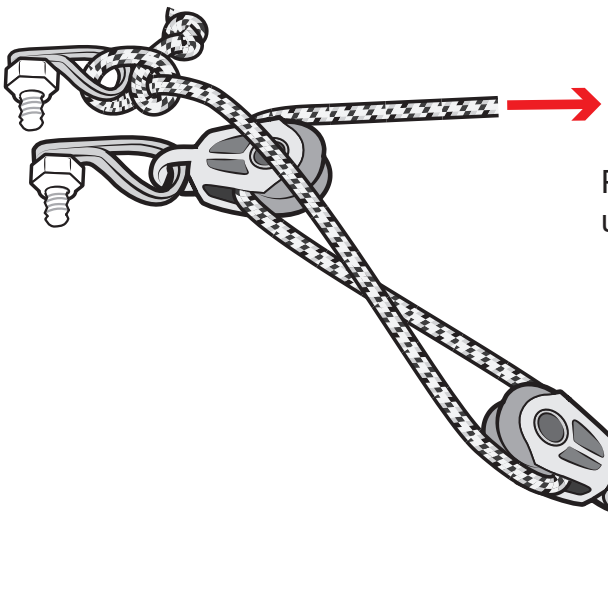

Pass the end through the block on the underside of the seat.

f)

Pass the end through the cleat on the underside of the seat.

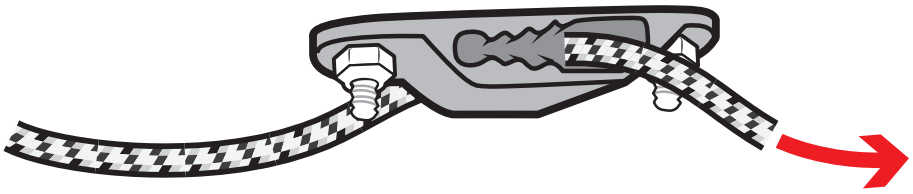

13.4 - Adding the Seat Retainers

g)

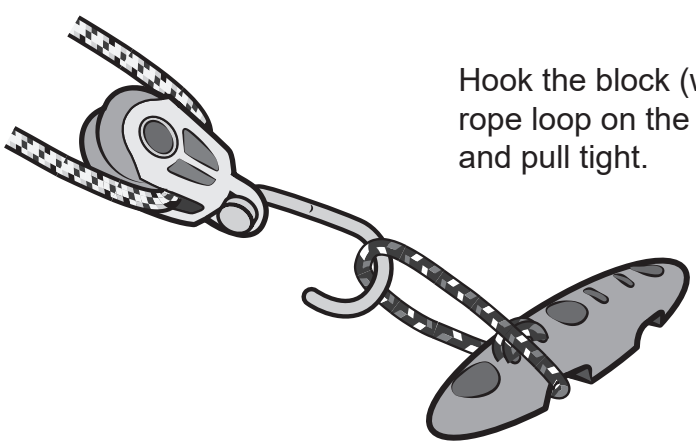

Hook the block (which you attached in **step d**) onto the rope loop on the deck organiser (as shown in **step b**) and pull tight.

4.5 - Adding the Toerails

a)

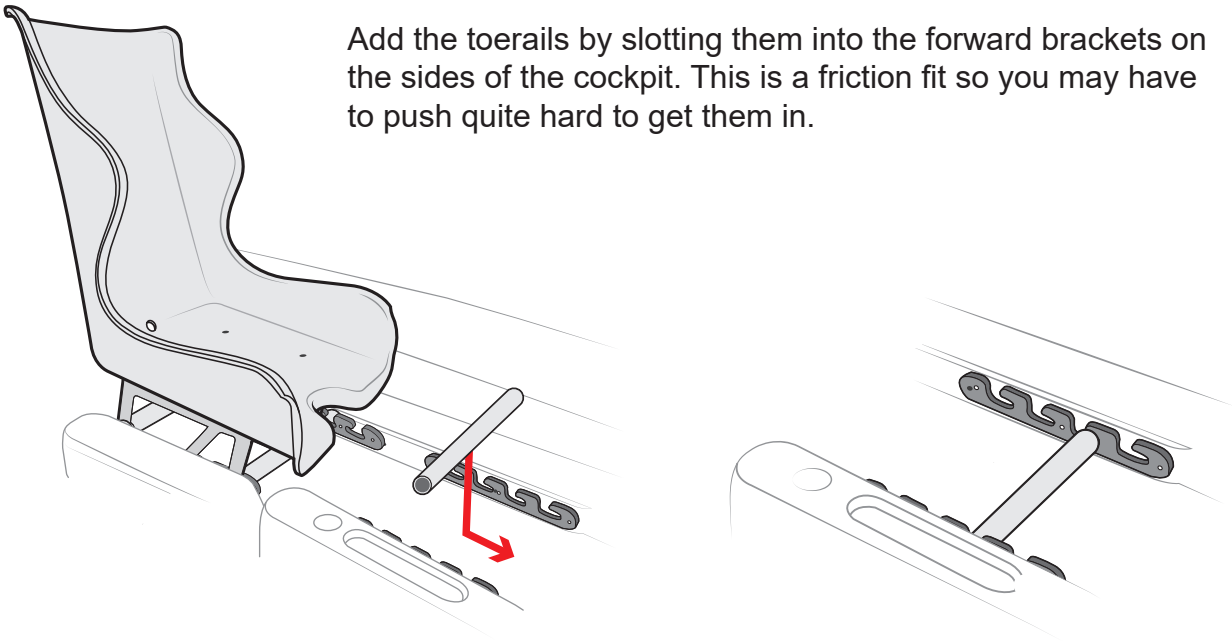

Add the toerails by slotting them into the forward brackets on the sides of the cockpit. This is a friction fit so you may have to push quite hard to get them in.

RS venture connect

Seated Control System

14. Center console

If the SCS kit has already been fitted, you must still complete steps 14.1, 14.2, 14.3, 14.4, 14.5, 14.7

PLEASE FOLLOW RIGGING GUIDE IN CORRECT ORDER

14.1 - Adding the Center Console

Once the keel is strapped down, you can add the center console into the hole left by the keel hoist.

a)

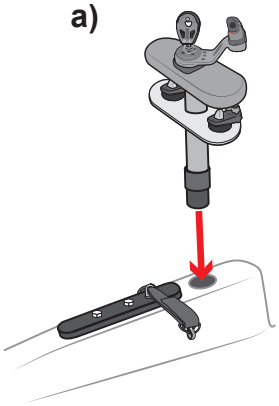

b)

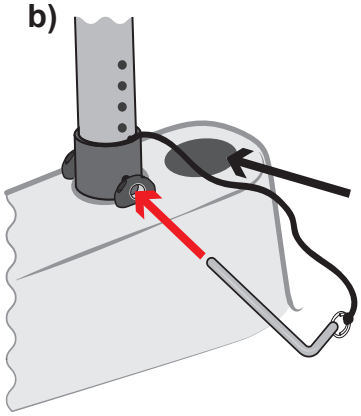

Use the pin through the two bullseyes and the center console base tube to lock the center console in place.

The height is adjustable.

Boats made after October 2016 have 2 hole positions for the plinth.

Most of the control lines in the boat must now be routed to the center console to allow you to operate them from the seats.

14.2 - Adding the Furling Line to the Center Console

a)

Untie the figure of eight in the end of the jib furler line and unthread it from the cleat under the foredeck.

Make sure the furler is fully charged

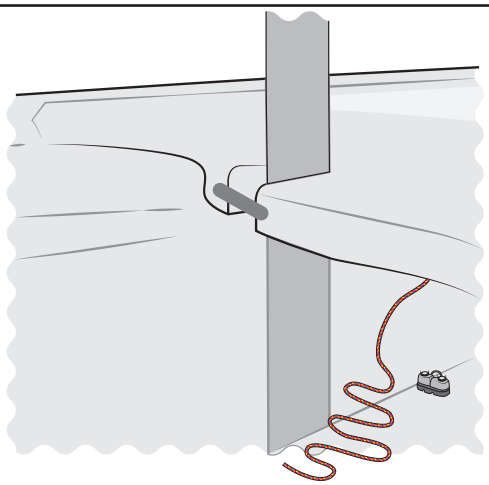

b)

Thread the furling line through the cleat on the starboard side of the center console and tie a figure of eight in the end.

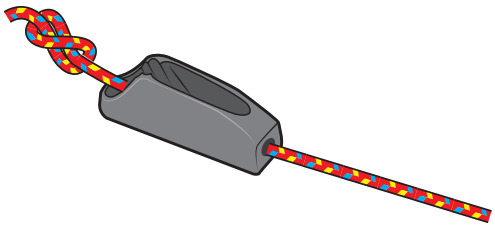

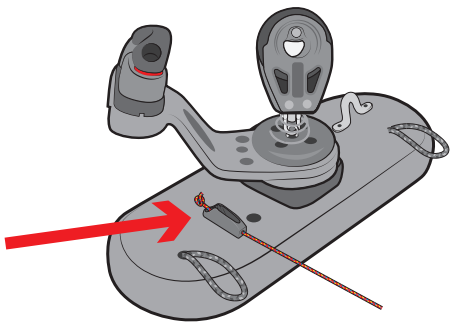

14.3 - Adding the Gennaker Halyard Firing Line

a)

Locate the gennaker halyard firing line, handle and rope loop with a block on it in the SCS kit.

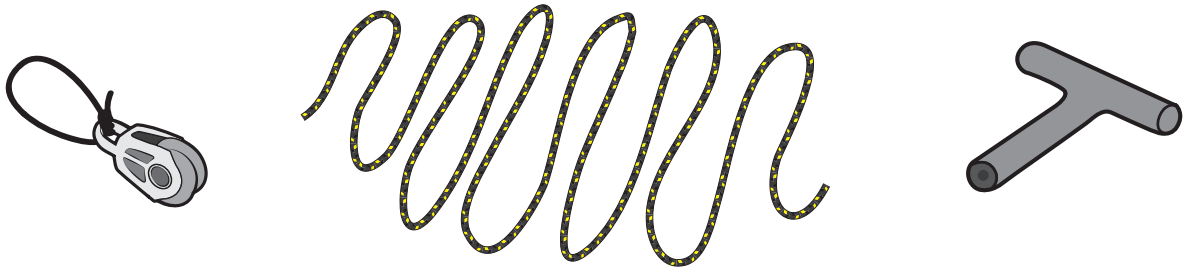

b)

Open the mast gate and slide the rope loop (with block attached) over the mast gate. Close the mast gate again.

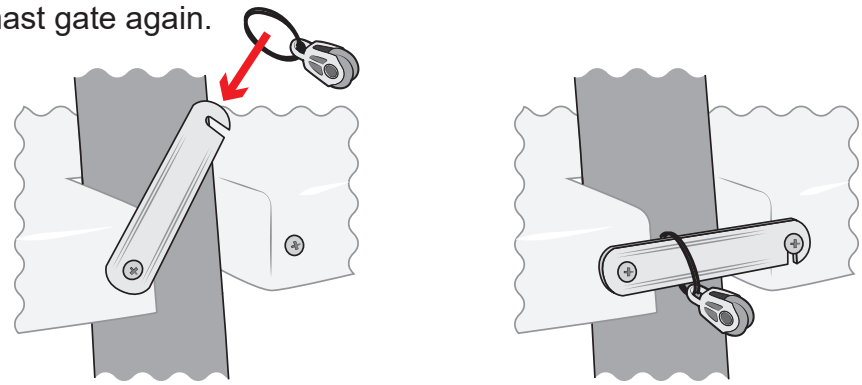

c)

Pass one end of the firing line through the handle as shown and tie a figure of eight in the end.

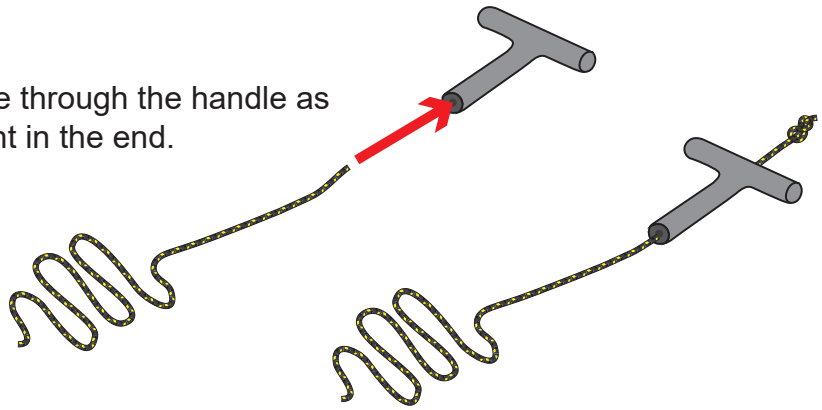

d)

Pass the other end of the line forwards through the eyelet on the port side of the center console.

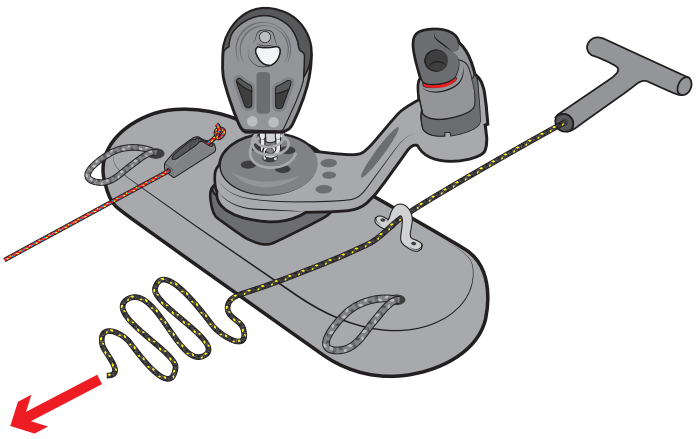

5.3 - Adding the Gennaker Halyard Firing Line

e)

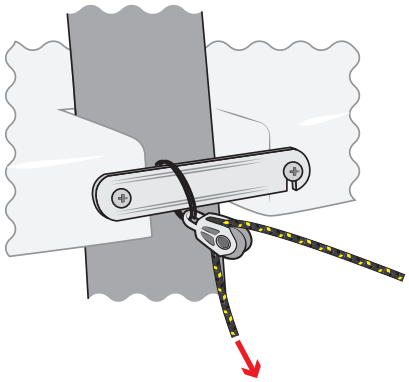

Pass the end of the line through the block on the mast gate (that you added in **step b**).

f)

Tie a small **knot #4** in the end of the line, then slot this into the hole on the side of cam on the spinlock.

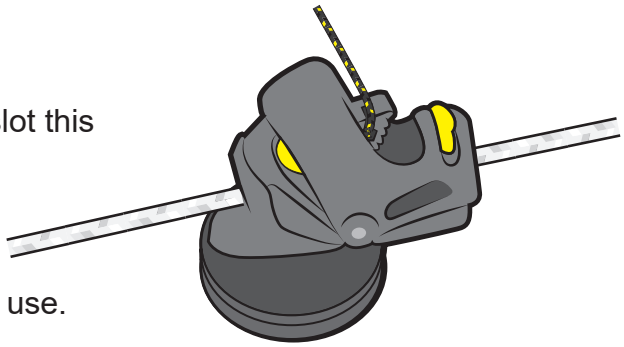

The gennaker halyard firing line is now ready to use.

g)

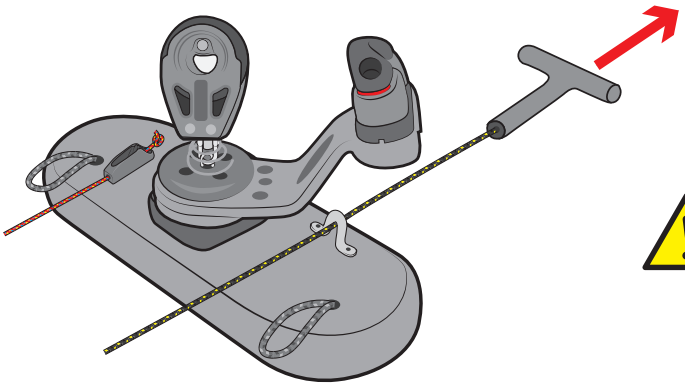

It is good practice to pull the downhaul tight before releasing the firing line.

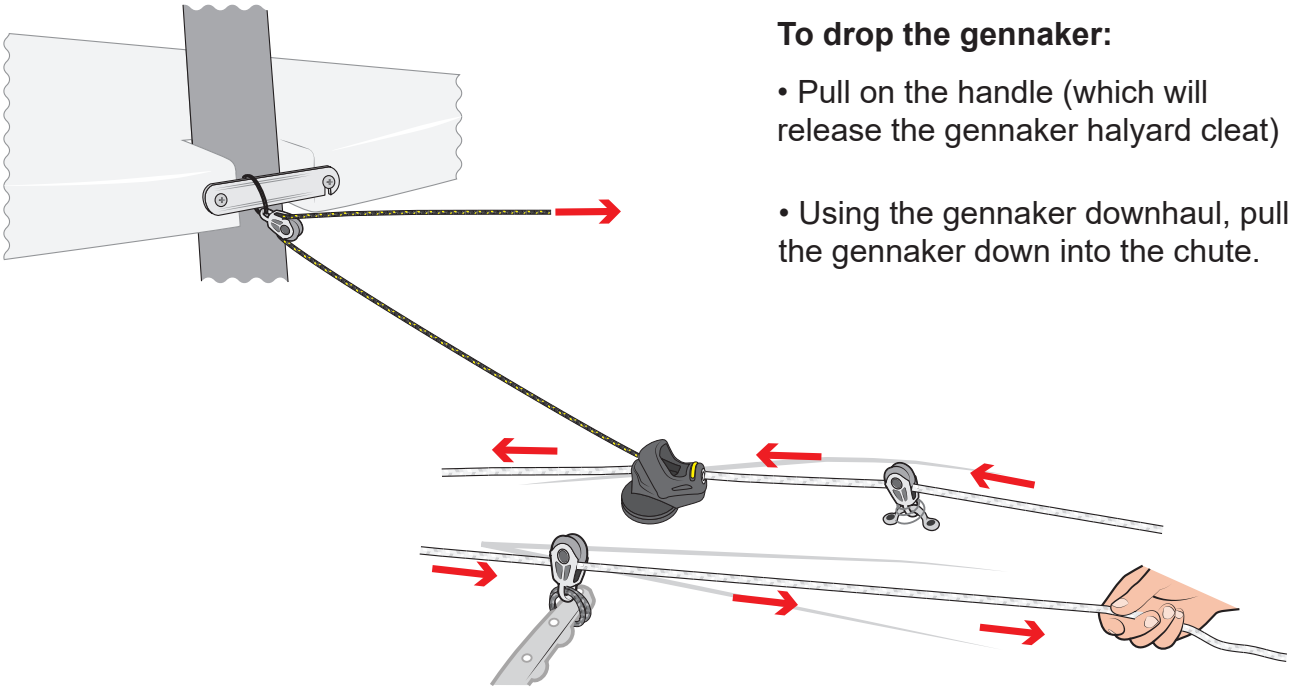

To drop the gennaker:

- Pull on the handle (which will release the gennaker halyard cleat)
- Using the gennaker downhaul, pull the gennaker down into the chute.

14.4 - Adding the Downhaul Control Line to the Center Console

Make sure you have added the downhaul control line to the boat first (**section 3**).

a) Locate the block attached to the downhaul control line between the cleat and the hole in the foredeck.

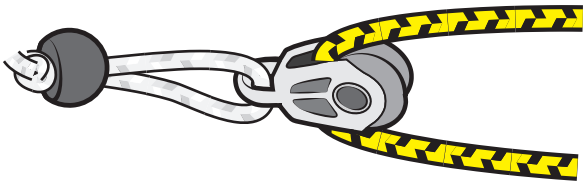

b)

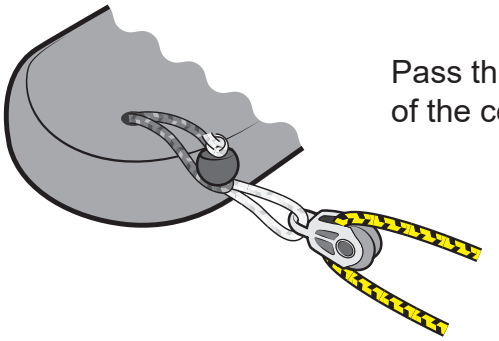

Pass this bobble through the loop on the starboard side of the center console.

c) The downhaul control line is now ready to use.

Increasing downhaul tension

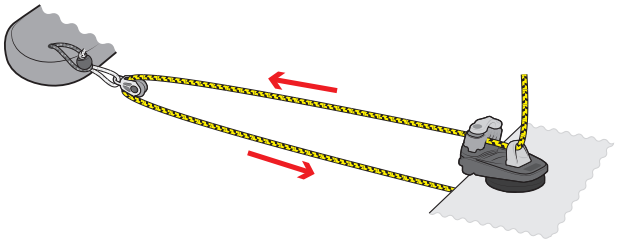

decreasing downhaul tension

release control line from cleat

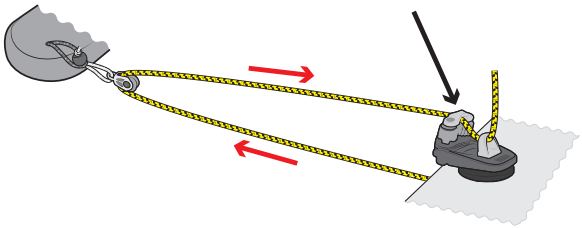

14.5 - Adding the Gnav Control Line to the Center Console

Make sure you have added the gnav control line to the boat first (**section 3**).

a)

Locate the block attached to the gnav control line between the cleat and the hole in the foredeck.

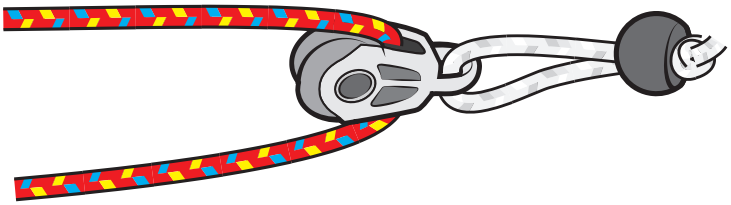

b)

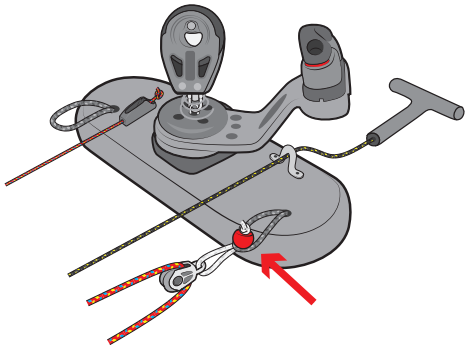

Slot this plastic bobble into the rope loop on the port side of the center console.

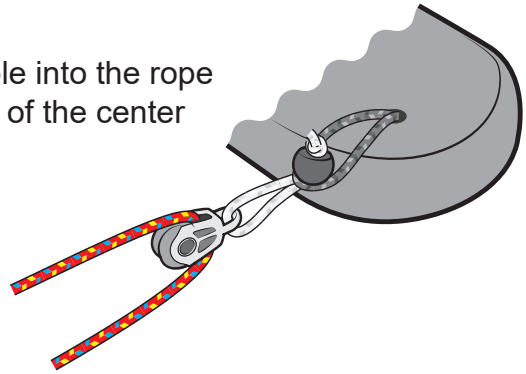

c)

The gnav control line is now ready to use.

Adding gnav tension

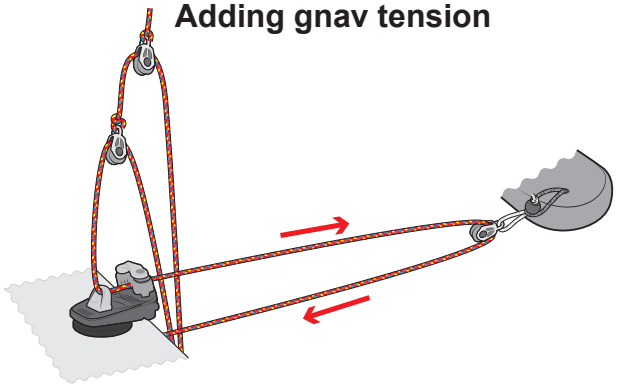

Releasing gnav tension

release control line from cleat

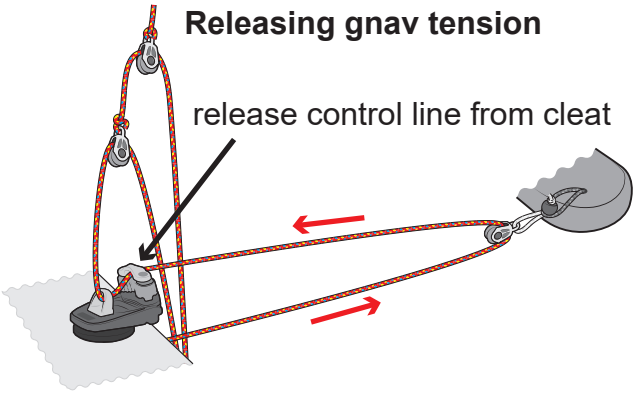

14.6 - Rigging the Mainsheet to the Center Console

a)

Untie the figure of eight in the end of the mainsheet, then unthread it from the mainsheet block.

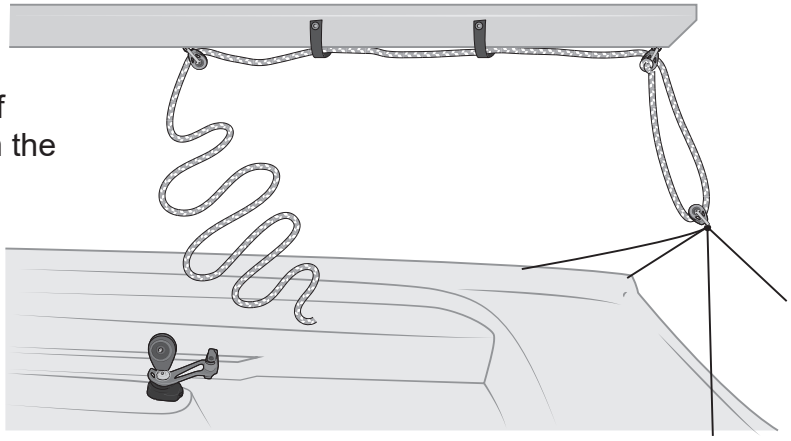

b)

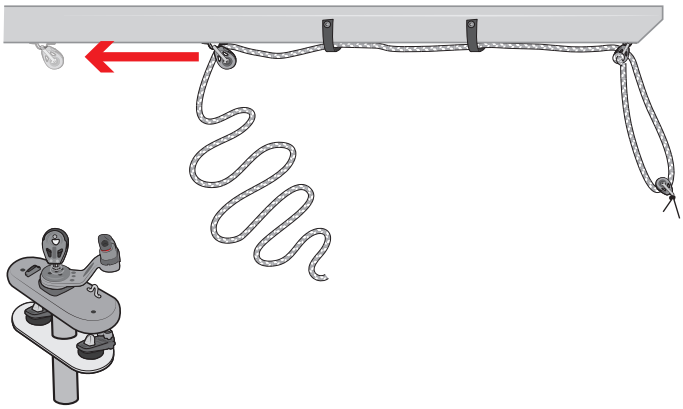

You will need to reposition this block so that it hangs directly above the center console. To do this, loosen the screw in the track above the block, reposition the block then tighten the screw again.

c)

Pass the tail of the mainsheet through the new mainsheet ratchet block on the center console and tie a figure of eight in the end.

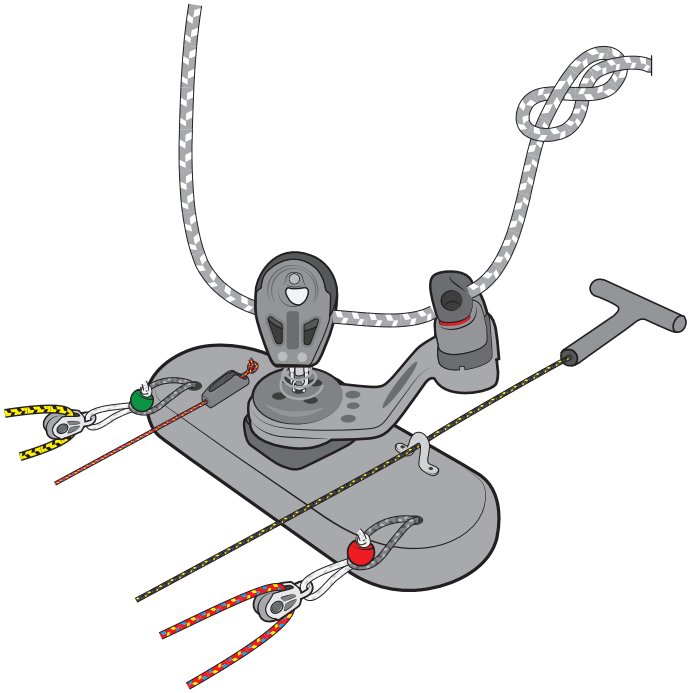

The mainsheet base can swivel to allow you to pull it in and cleat it from any direction.

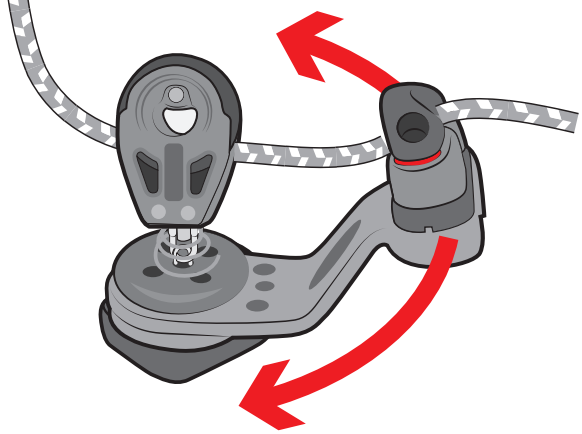

14.7 - Rigging the Jib Sheets to the Center Console

a)

Locate the jib sheet blocks, metal spacers, 30mm jib blocks and the jib block tie in the SCS kit.

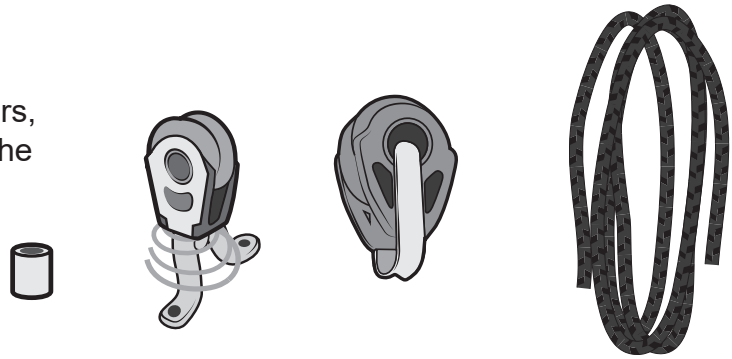

b)

Completely remove the jib sheet.

c)

Remove the two bolts holding the fairlead to the jib car.

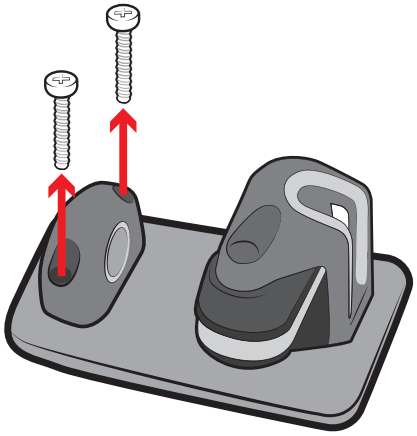

d)

Add metal spacers into the fairlead holes then add the jib sheet blocks on top of the fairlead using the bolts you removed in **step c**.

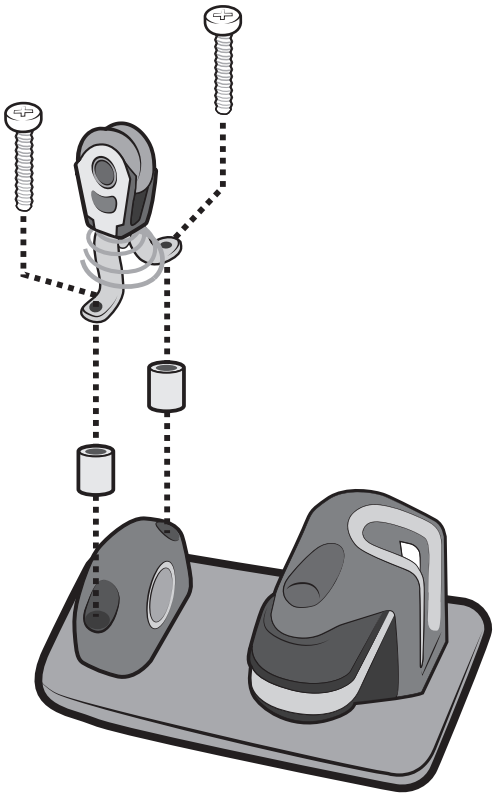

14.7 - Rigging the Jib Sheets to the Center Console

e)

Tie the two 30mm blocks tightly onto the tack of the jib.

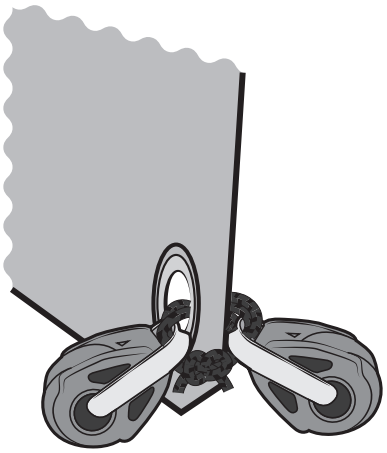

f)

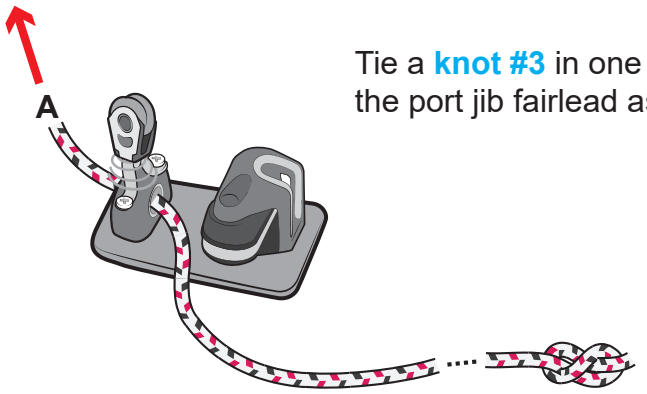

Tie a **knot #3** in one end of the jib sheet and feed it through the port jib fairlead as shown.

g)

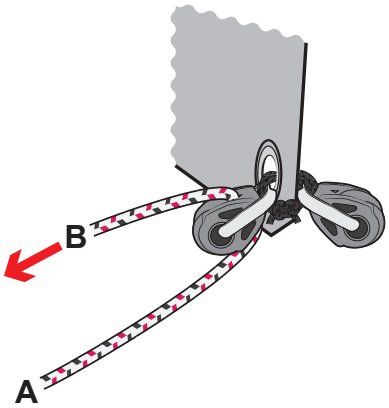

Feed the jib sheet through the port block on the jib.

h)

Thread the jib sheets through the small blocks on top of the port jib fairlead.

Do not pass the jib sheet through the fairlead or cleat.

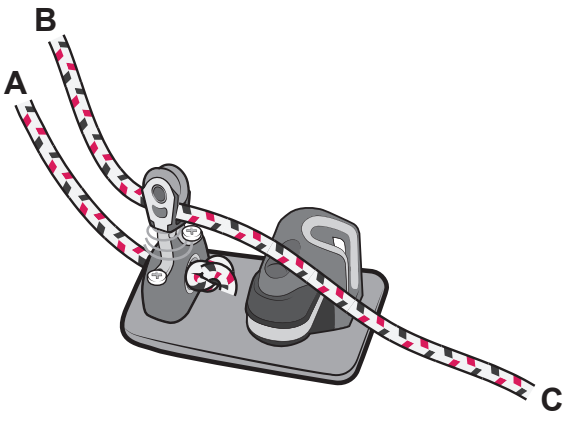

14.7 - Rigging the Jib Sheets to the Center Console

i)

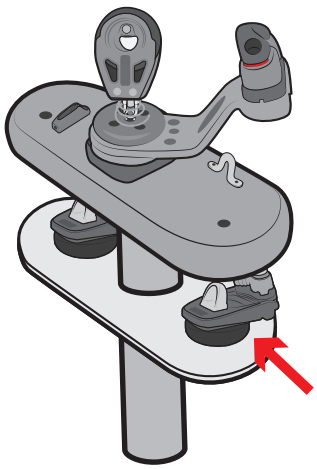

Feed the jib sheet through the port cleat on the lower tier of the center console.

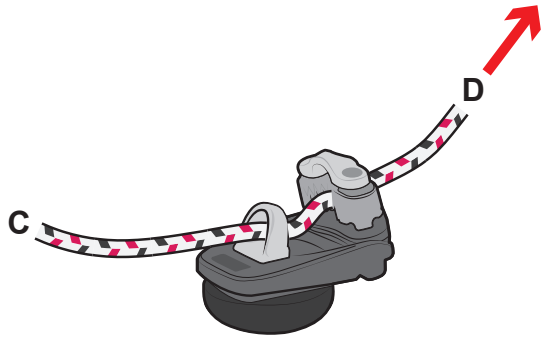

j)

Lead the jib sheets through the starboard cleat.

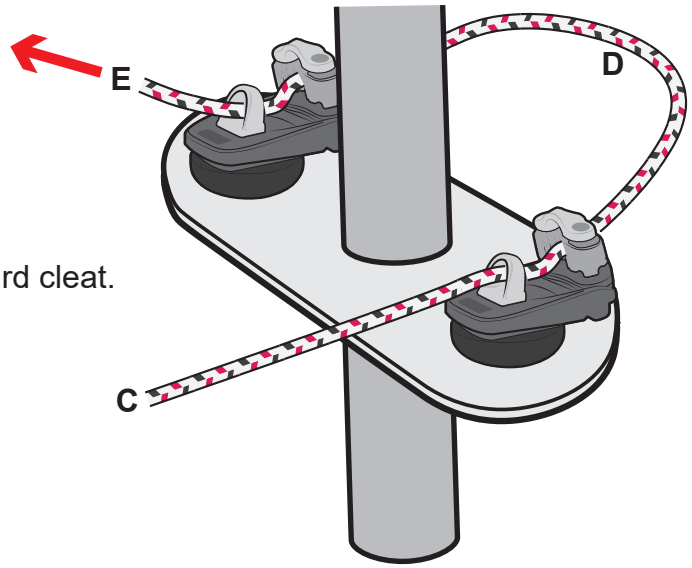

k)

Pass the jib sheet through the block on top of the starboard jib fairlead.

Do not pass the jib sheet through the fairlead or cleat.

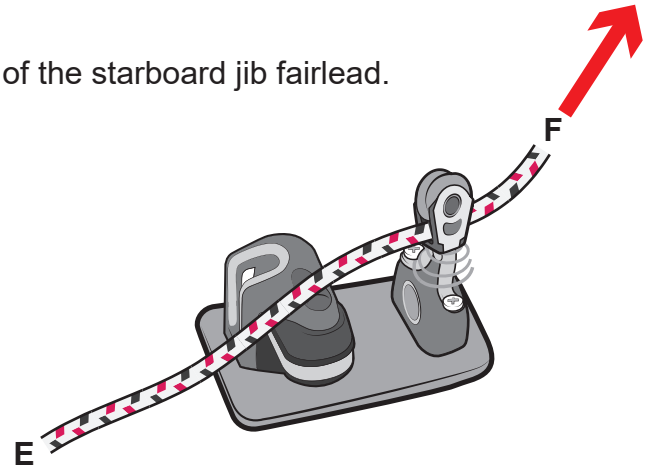

14.7 - Rigging the Jib Sheets to the Center Console

l)

Feed the jib sheet through the starboard block on the jib.

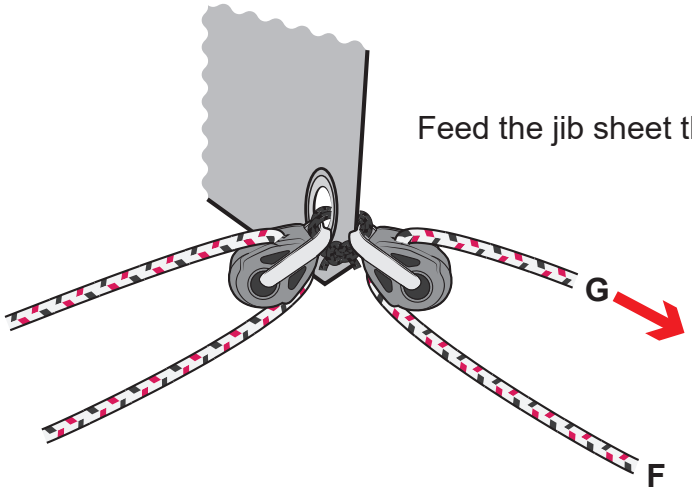

m)

Feed the jib sheet through the starboard jib fairlead and tie a figure of eight in the end.

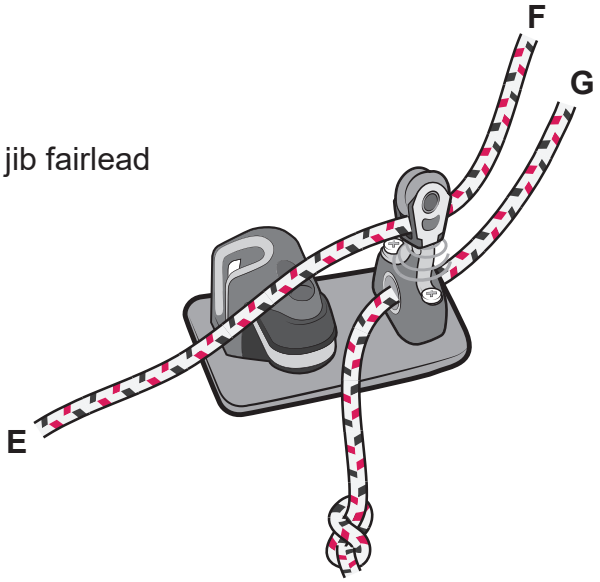

The jib sheet is now ready to use.

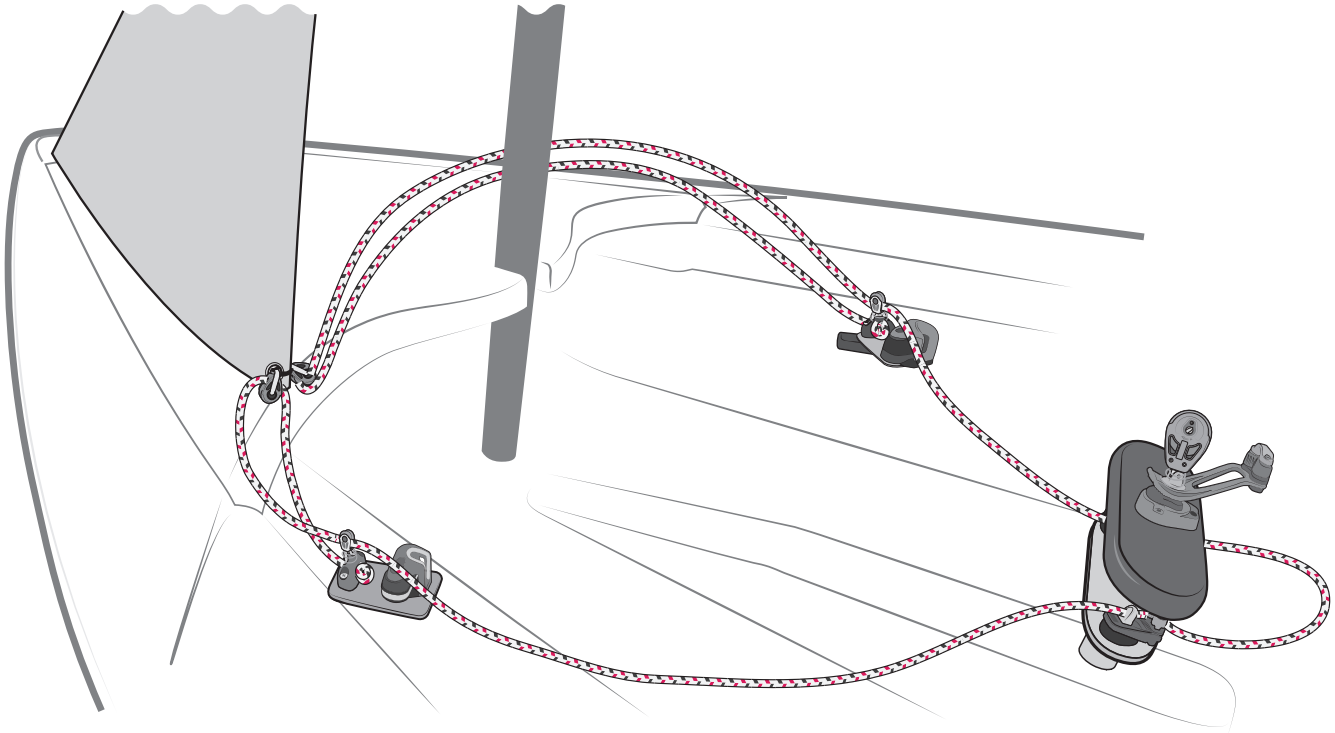

RS venture connect

Seated Control System

15. Steering lines

If the SCS kit has already been fitted, go straight to 15.4i

Different low friction steering options i.e. left is right are visible in the Modifications Section

PLEASE FOLLOW RIGGING GUIDE IN CORRECT ORDER

There are six steering line tidies which must be added to the hull before you can fit the steering lines.

15.1 - Adding the Steering Line Tidies

a)

Locate the steering line tidies in the SCS kit.

There will be two with just a block attached (for the aft gunwhales), two with blocks and steering lines attached (forward cockpit sides) and two with a block and a metal clip (for the aft cockpit floor).

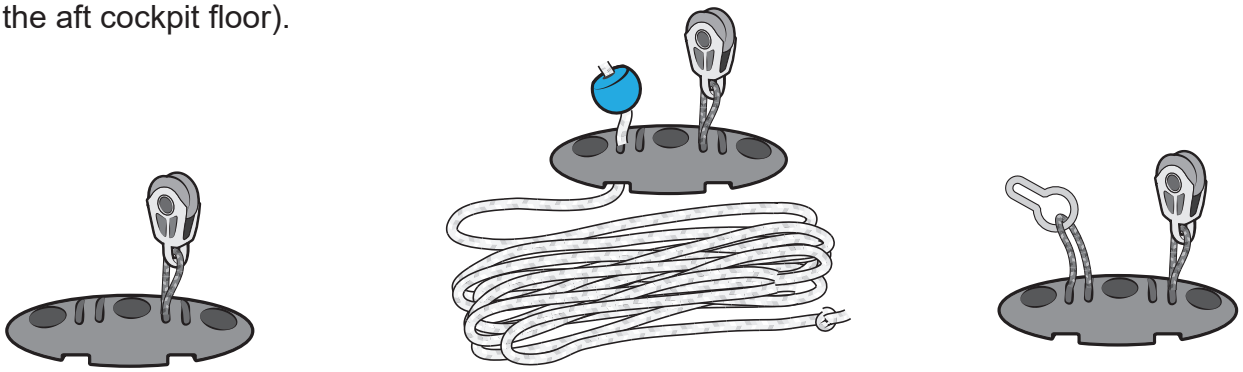

aft gunwale | fwd cockpit sides | aft cockpit floor

b)

Remove the 3 screws in the aft corner of the cockpit on both sides of the boat.

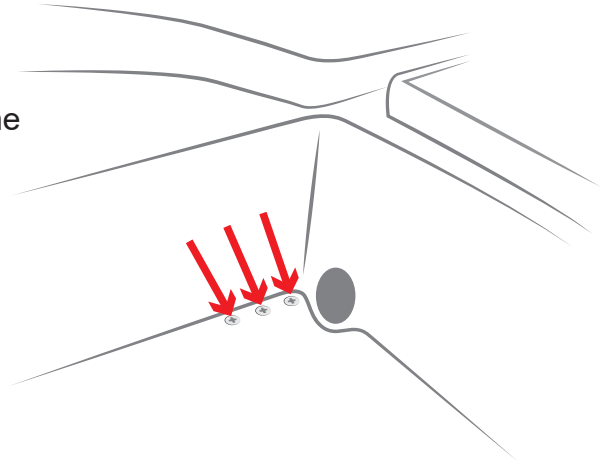

c)

Line up the steering line tidies with the screw holes (keeping the clip towards the bow and the block towards the stern) and screw into place using the screws you removed in **step b**.

Add sealant into holes first.

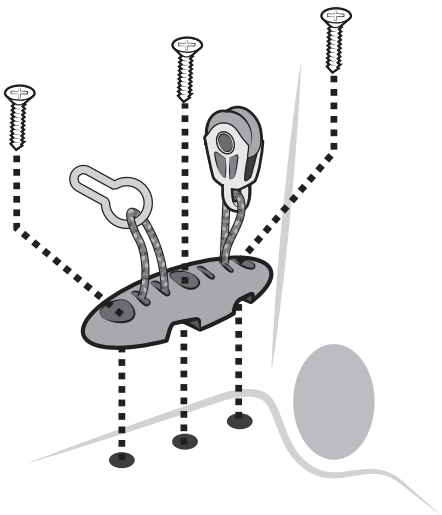

15.1 - Adding the Steering Line Tidies

d)

Remove the 3 screws on top of the gunwale near the stern on both sides of the boat.

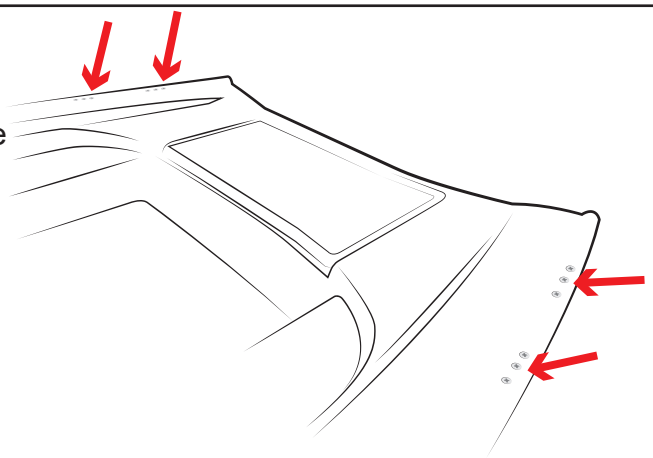

e)

Line up the steering line tidies with the screw holes (keeping the block towards the stern) and screw into place using the screws you removed in **step d**.

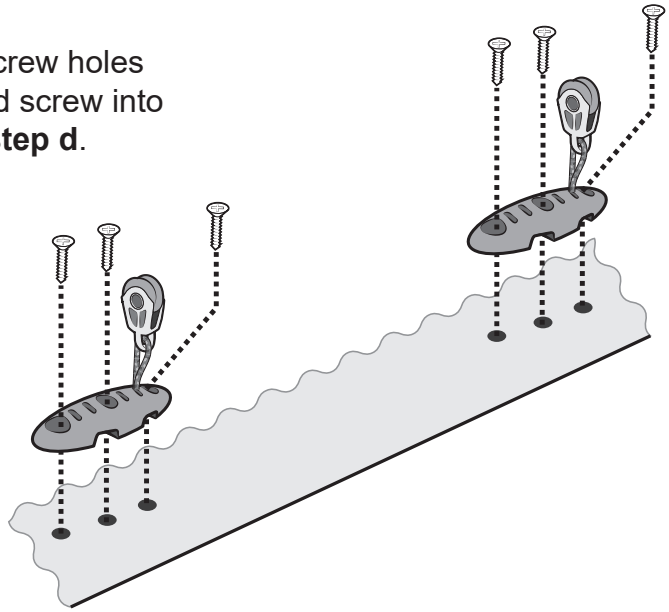

f) Add one Dacron patch on each side of the boat, just inboard of these steering tidies.

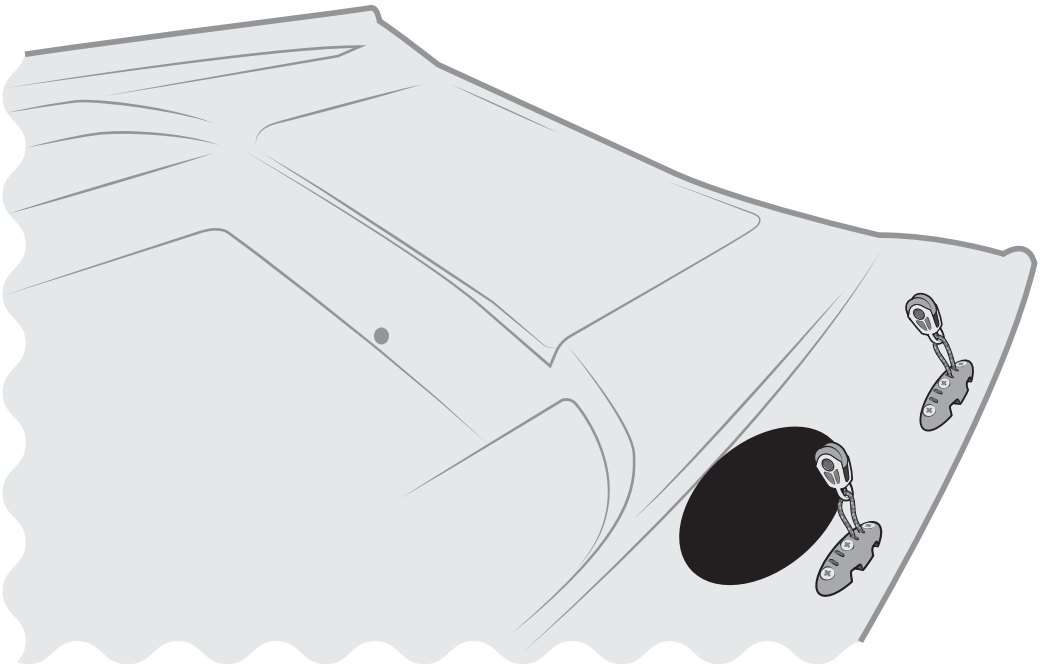

g)

Remove the 3 screws at the sides of the cockpit just above the front end of the seat inserts.

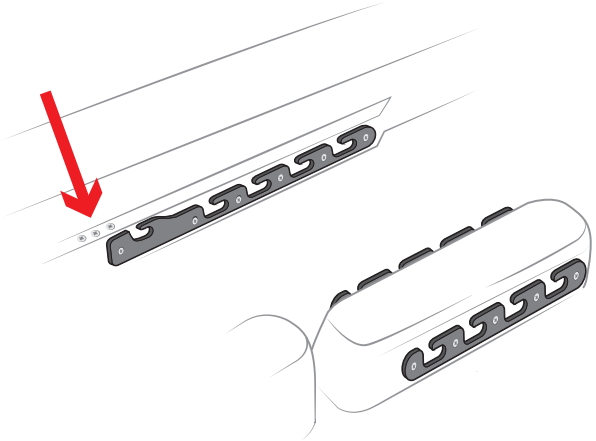

Add sealant into holes first.

h)

Line up the steering line tidies with the screw holes (keeping the steering line at the front and the block towards the stern) and screw into place using the screws you removed in **step d**.

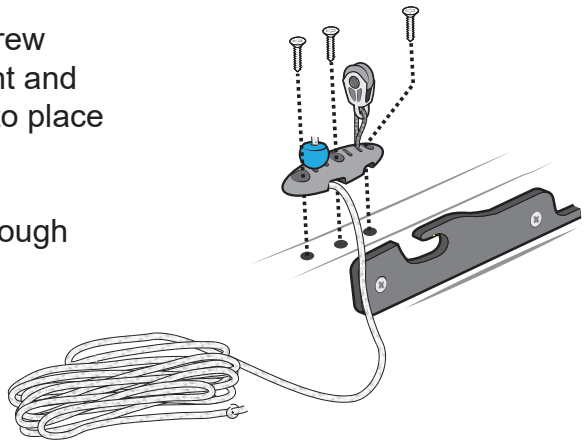

Make sure the steering line comes out through the hole towards the center of the boat.

Add sealant into holes first.

15.2 - Adding the Steering Handles

a)

Remove the screws from the front slot of the seat inserts either side of the cockpit.

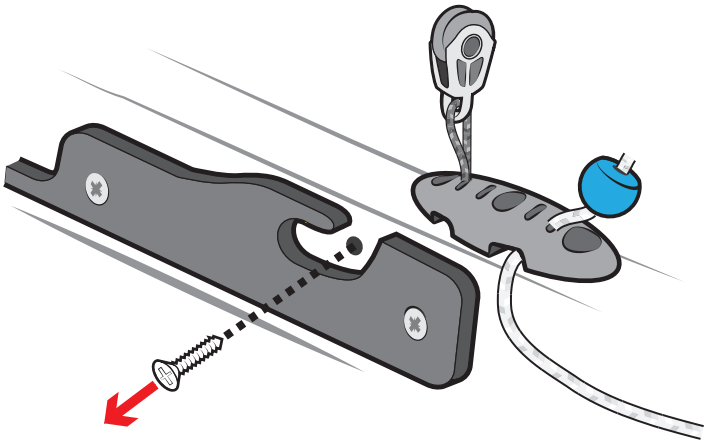

b)

Add the steering handles by sliding the ends of the steering bar into the front slot of the seat inserts.

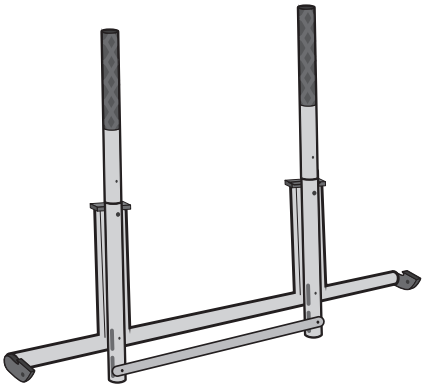

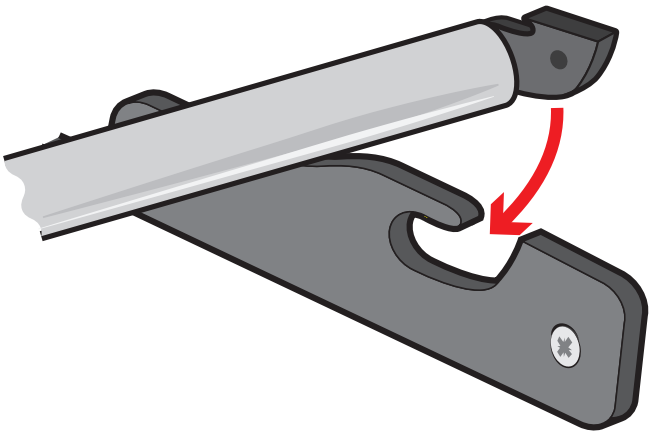

c)

Fix the steering bar into place using the screws removed in **step a**.

Add sealant into holes first.

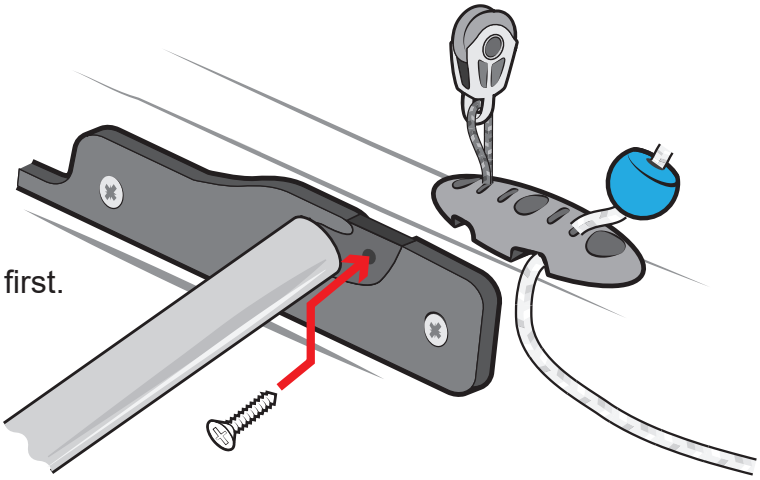

15.3 - Preparing the Tillers

Skip section 15.3 If the SCS kit has already been fitted.

a)

Remove the tiller extension.

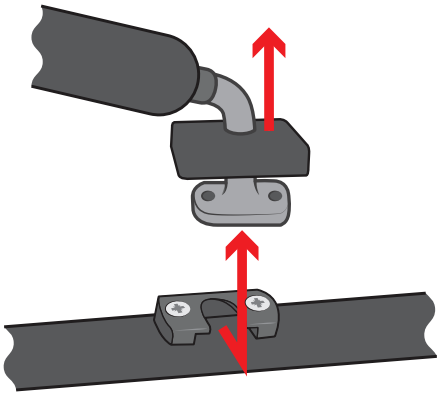

b)

There is an eyelet attached to the end of each tiller.

Remove the screw holding one end of the eyelet.

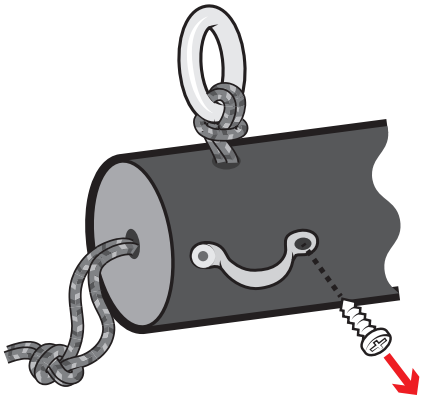

c)

Rotate the eyelet to allow you to add the Q-clip, then rotate the eyelet back into place.

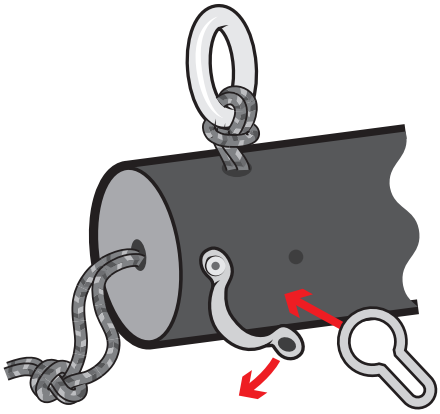

d)

Replace the screw.

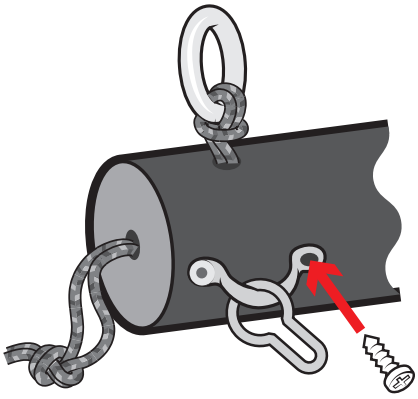

15.4 - Adding the Steering Lines

If the SCS kit has already been fitted go straight to step i.

a)

Locate the two knotted steering lines and the two 20mm steering line blocks in the SCS kit.

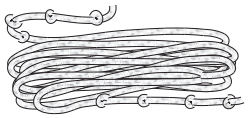

The steering lines are in two parts. The first parts of the steering lines already attached to the front organisers. Follow **steps b-i** for how to rig the port steering line, then repeat (mirrored) on the opposite side of the boat for the starboard steering line.

b)

Take the end of the port steering line without the plastic bobble and pass it around the turning block in the port steering handle.

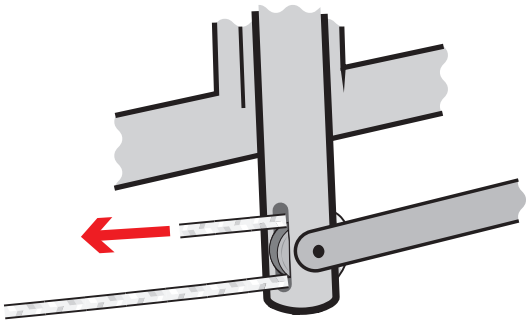

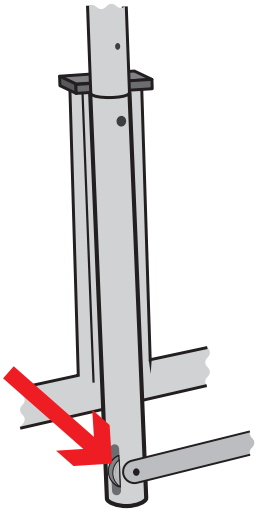

c)

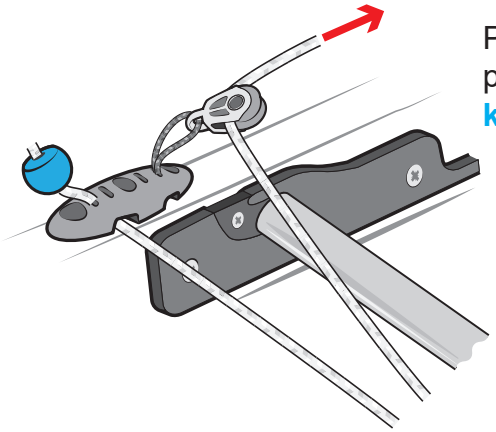

Pass the end of the line through the block on the front port organiser and tie a 20mm block on the end with **knot #1**.

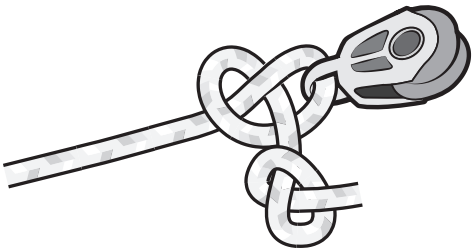

d)

Take one of the knotted steering lines from the SCS kit.

e)

Slot one of the knots into the Q-clip on the organiser in the aft corner of the cockpit floor. It doesn't matter which knot you use at this point.

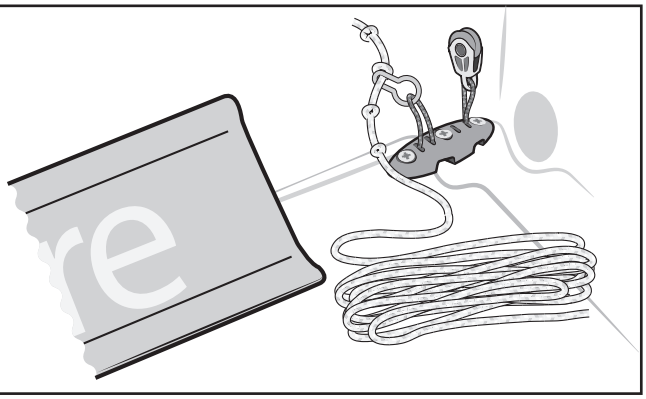

15.4 - Adding the Steering Lines

f) Pass the other end of the knotted line forwards under the side plate, around the block added in **step c**, and back under the plate.

g)

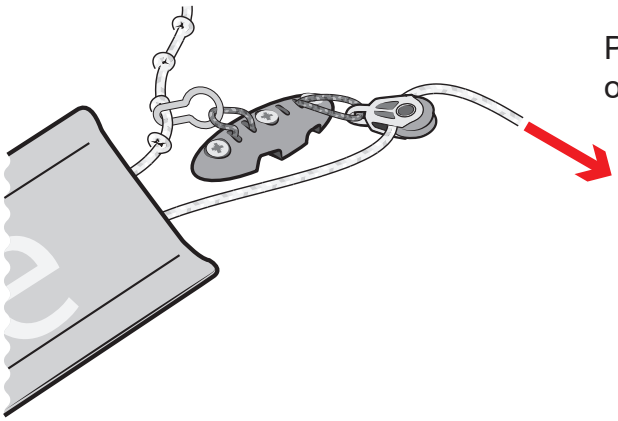

Pass the end through the block on the port organiser in the aft corner of the cockpit floor.

h) Pass the end across the boat and through the blocks on the **starboard** gunwale.

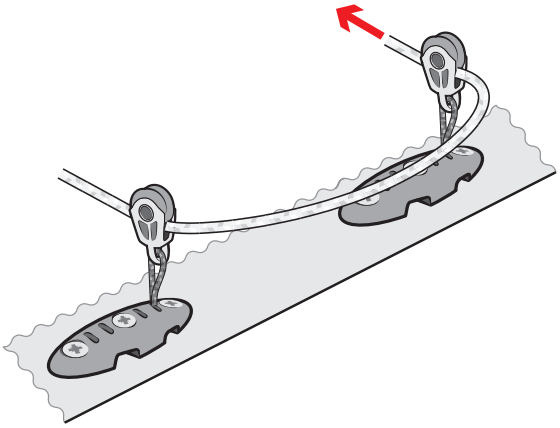

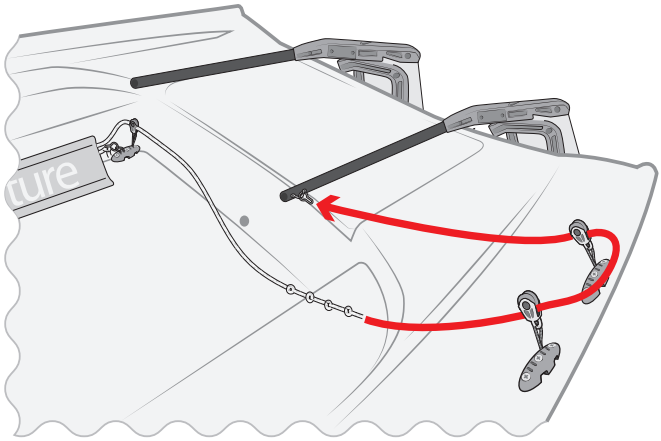

i)

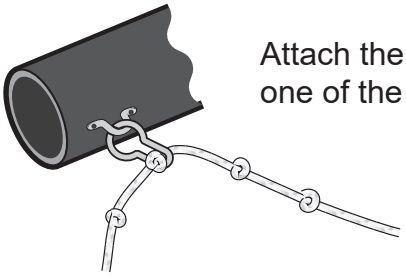

Attach the end of the rope to the starboard tiller by sliding one of the knots into the Q-clip.

j) Repeat **steps b-i** (mirrored) for the starboard steering line, so that the lines cross over at the back of the cockpit.

15.5 - Adding the Steering Line Elastics

a)

Locate the tiller elastic in the SCS kit.

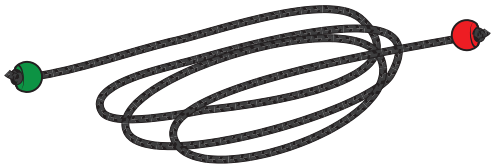

b)

Untie the knot and remove the red plastic bobble.

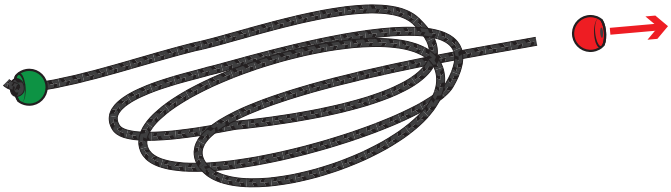

c)

Feed the tiller elastic through both eyelets on the aft face of the cockpit, from starboard to port (leaving the green bobble on the starboard side of the boat).

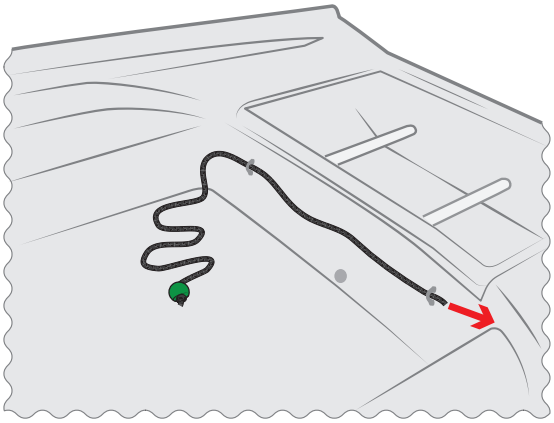

d)

Put the red bobble back on the end of the elastic and tie **knot #3** in the end.

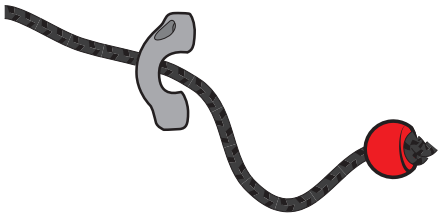

e)

Slide the green plastic bobble through the loop on the end of the starboard tiller and the red plastic bobble through the loop on the port tiller.

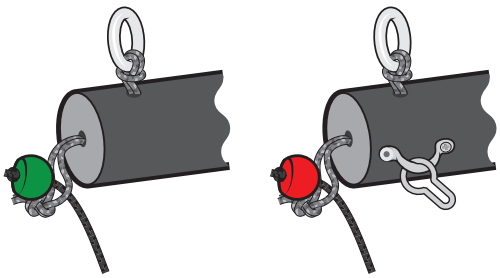

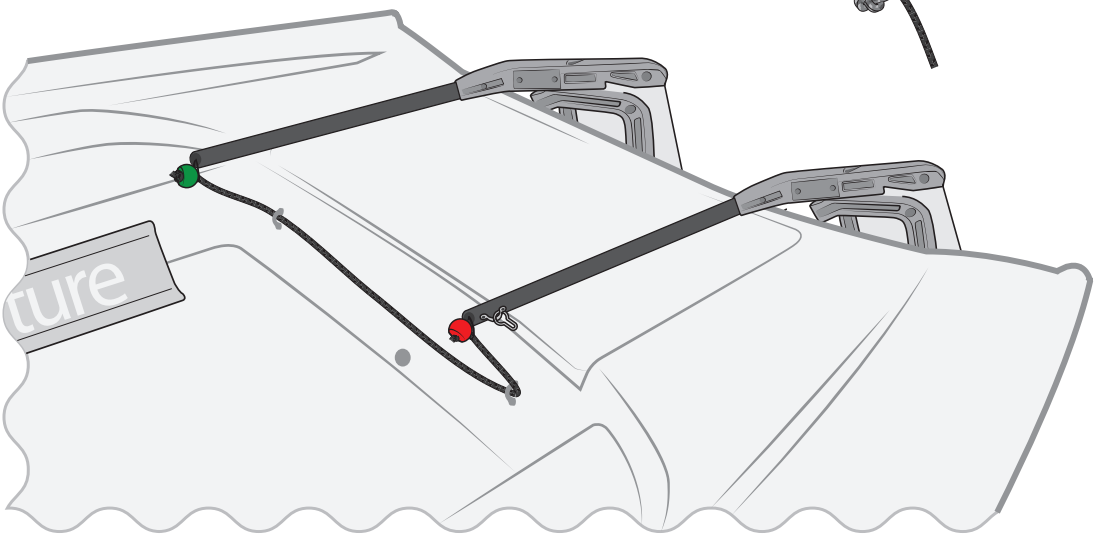

15.5 - Adding the Steering Line Elastics

f)

Take the steering line bungy from the pack and tie one end onto the forward steering line organiser on the port side of the boat with **knot #2**.

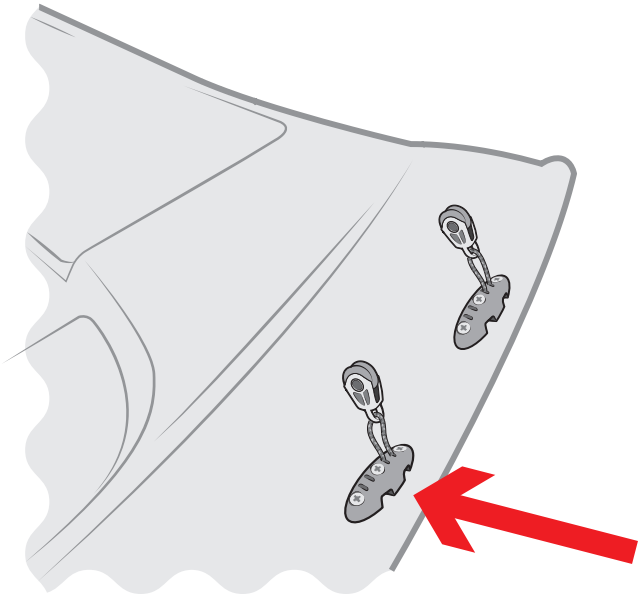

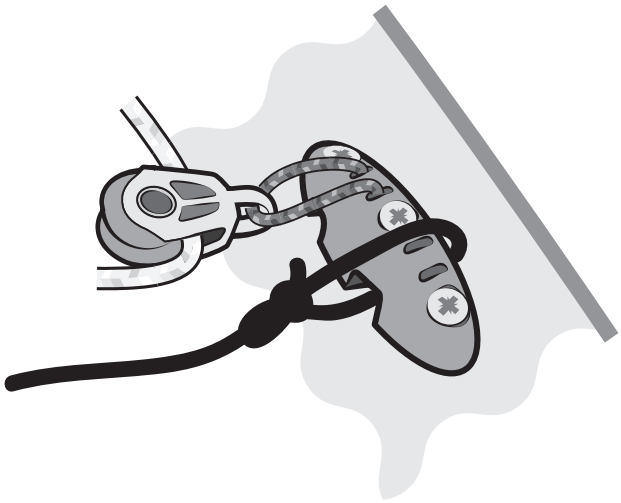

g)

Pass the end across the boat, passing through the rings on top of both tillers.

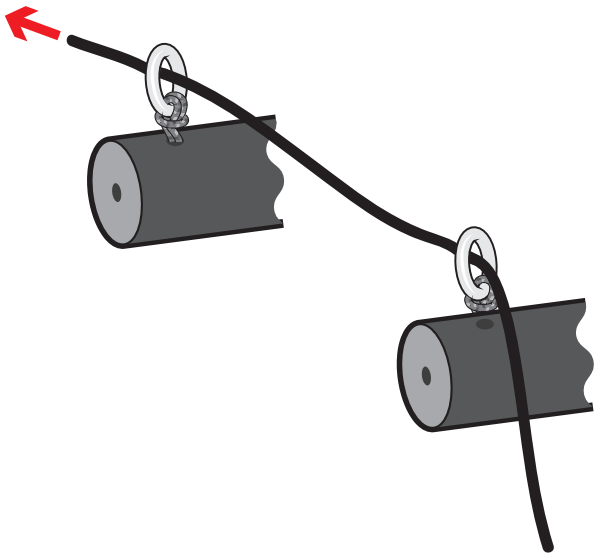

h)

Tie the end onto the forward steering line organiser on the starboard side of the boat with **knot #2**.

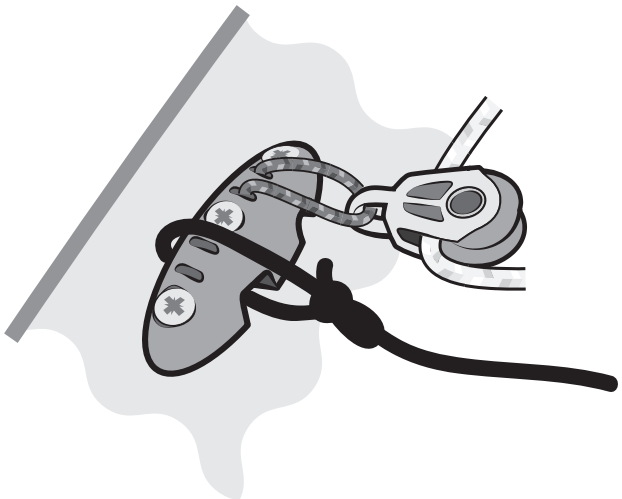

15.6 - Calibrating the Steering Lines

a)

Using the calibration pin attached to one of the steering columns, lock the steering handles in a vertical position.

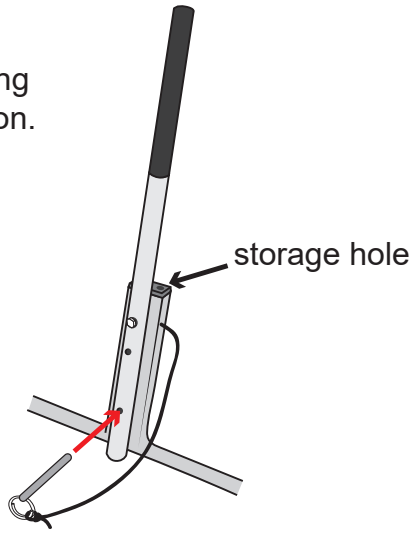

b) With the calibration pin still in place, adjust the lines so that the tension is even and the rudders face forwards. The tension can be adjusted at either end of the line by selecting which knot is in the clip.

c)

Remove the calibration pin.

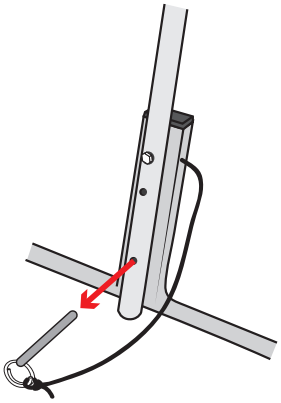

d)

Try moving the steering handles to check that the rudders respond correctly. If you have applied too much tension to the steering lines the handles will be hard to move; too little and the boat will be slow to respond.

Bear in mind that adjusting one end of one line will have an effect on the entire system, and with a little trial and error you should be able to set it up in a way that works best for you.

The steering lines may periodically need adjusting as the rope may stretch slightly with time.

Hint:
You may want to mark which knots you use before removing the rudders from the boat to save you calibrating it again next time you use it!

Fitting Webbing Bridges

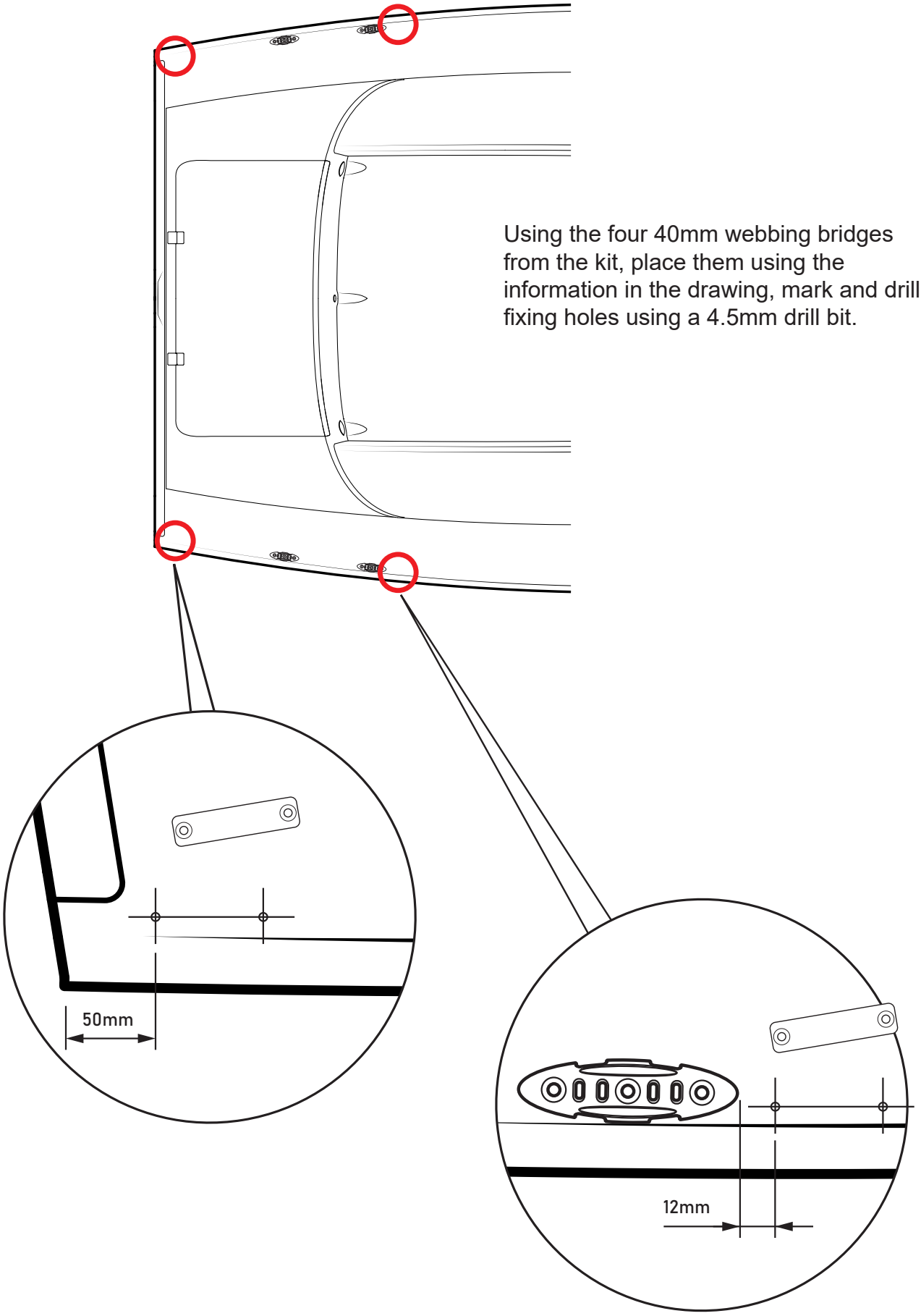

Using the four 40mm webbing bridges from the kit, place them using the information in the drawing, mark and drill fixing holes using a 4.5mm drill bit.

Fitting Webbing Bridges

Using the m4 x 30mm CSK bolts,
Washers and Nyloc nuts from the kit,
fit the webbing bridges.

NOTE: Do not over tighten the bolts.

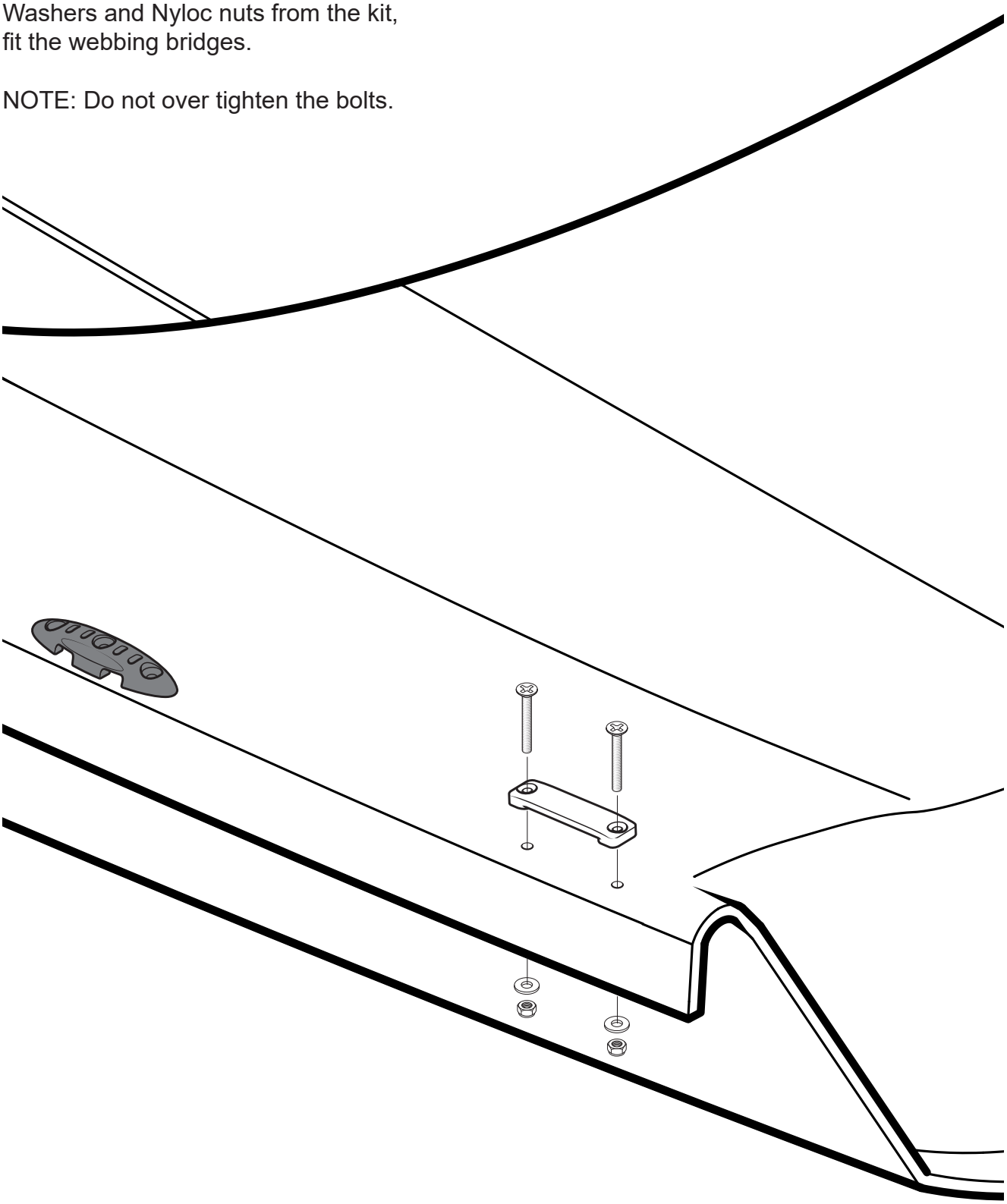

Fitting Mainsheet Cover

1. Insert the 2 battens into the cover.
2. Fold over the tensioning strap and secure it back under the cover onto the velcro

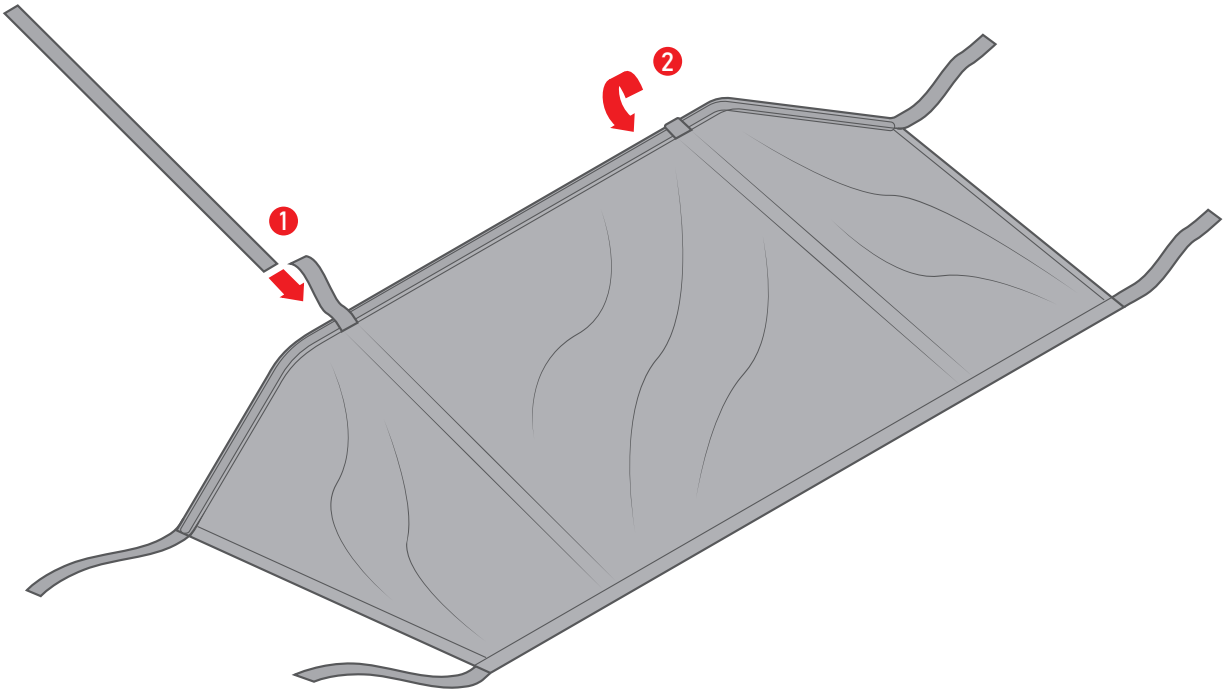

Place the mainsheet cover over the rear of the boat. **Make sure the mainsheet bridle and shock cord take up are on top of the cover**. Thread each strap through the webbing bridges. Make sure the cover is square and centrally located.

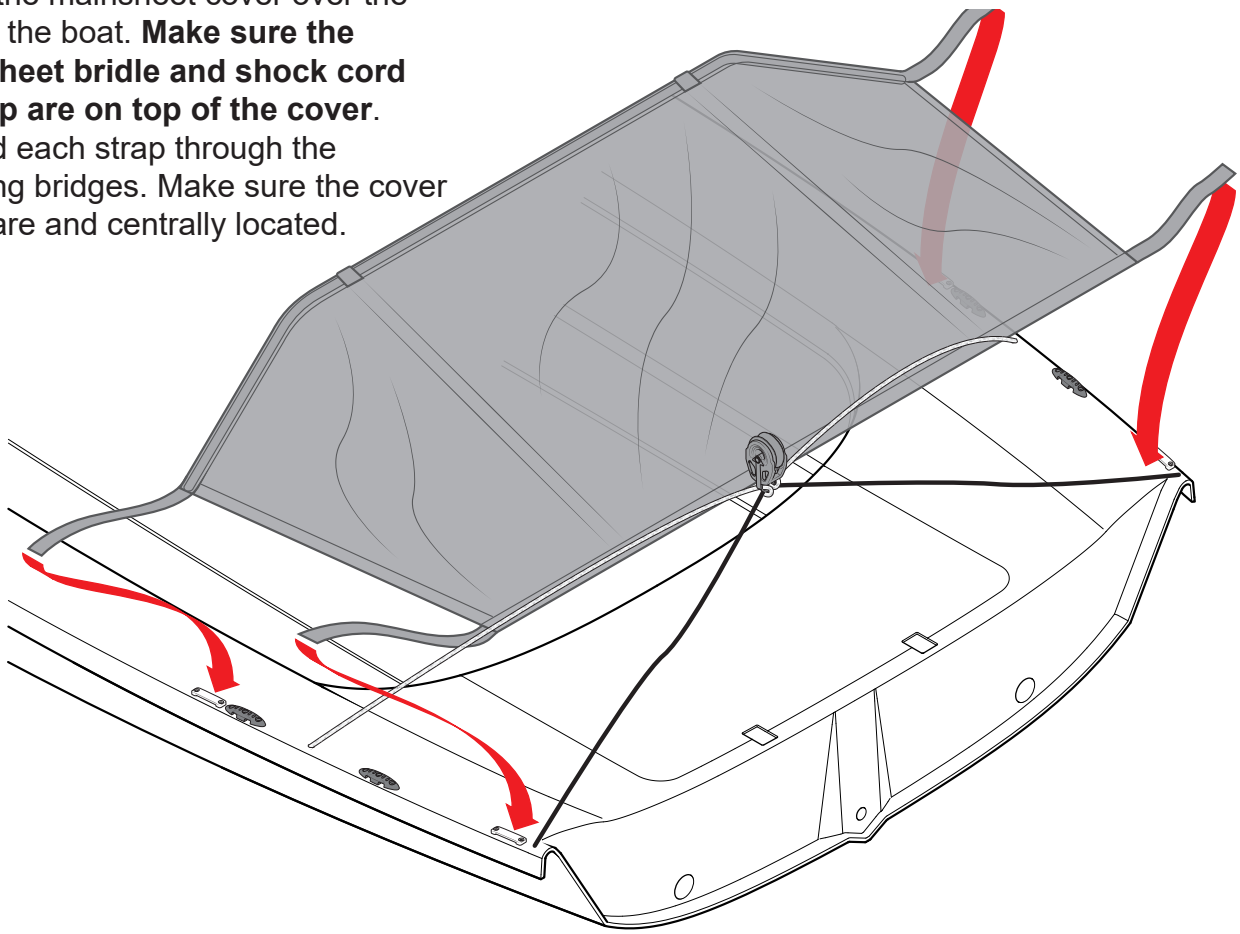

15.7 - Mainsheet Cover

Take each strap and tighten the cover down evenly, securing each strap back onto the velcro on the cover.

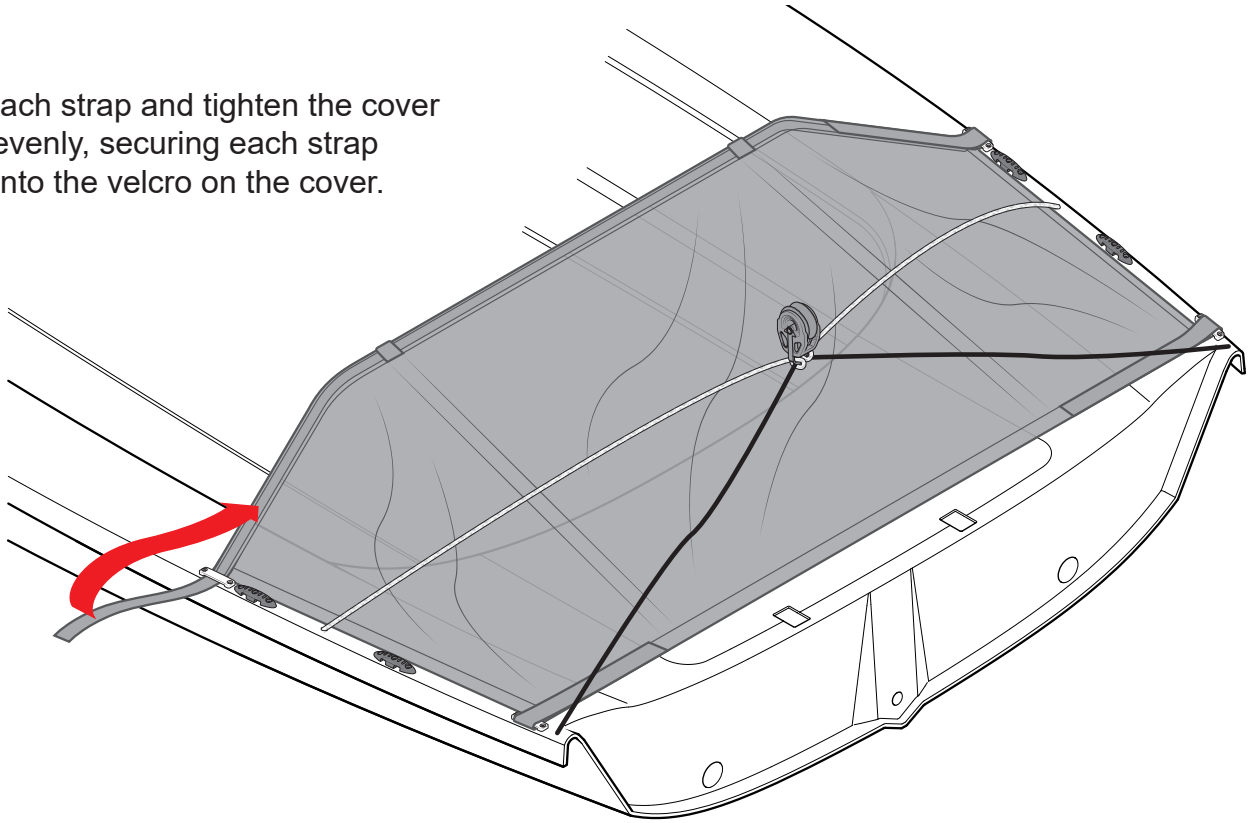

IMPORTANT

The mainsheet cover is now fitted. It is now important to check that the mainsheet bridle is functioning correctly and not trapped by the coer. Adjust as necessary.

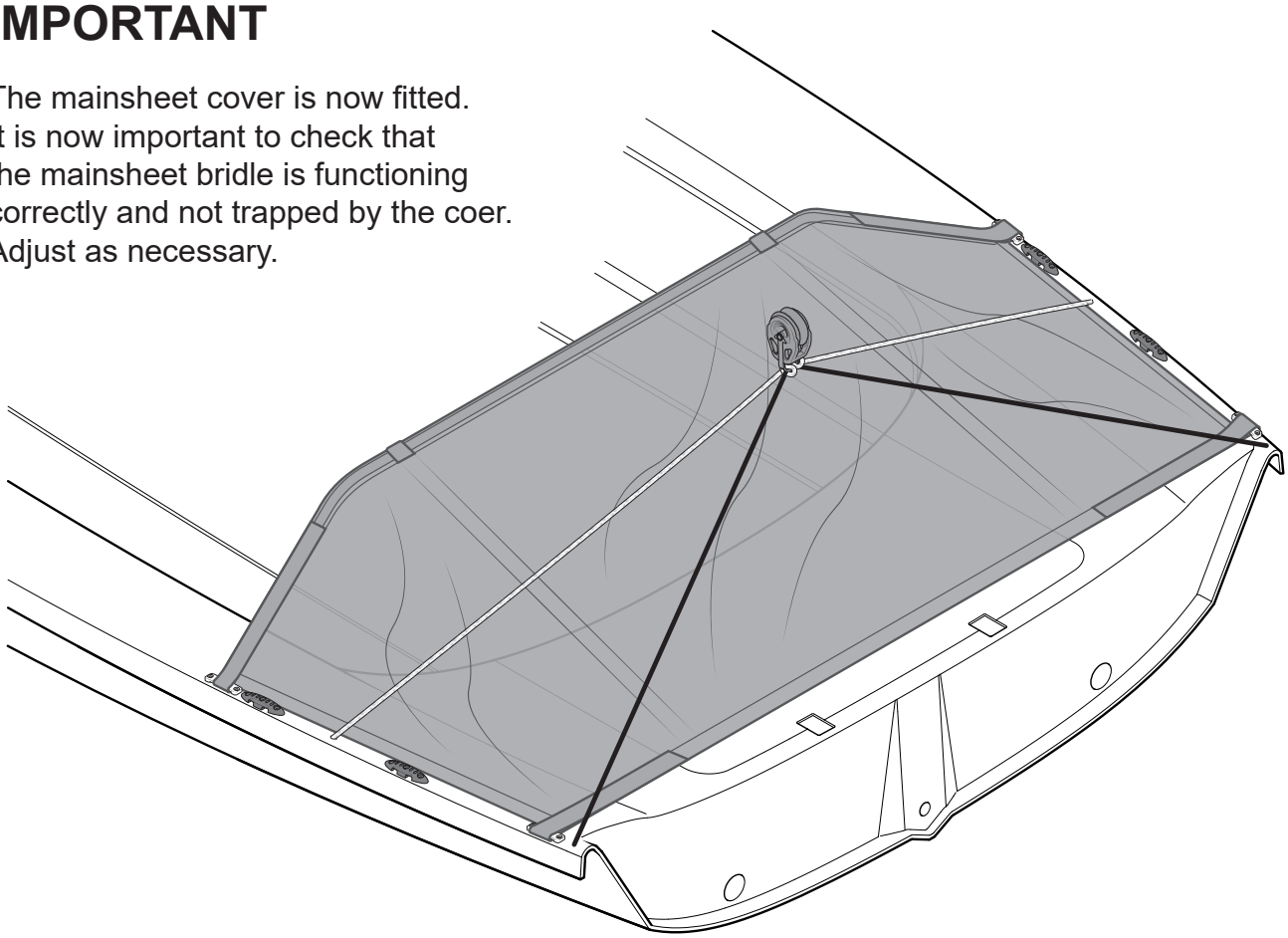

RS venture connect

Seated Control System

16. Elastic takeaways

If the SCS kit has already been fitted, go straight to 16.1d

PLEASE FOLLOW RIGGING GUIDE IN CORRECT ORDER

16.1 - Adding the Gennaker Uphaul/Downhaul Takeaways

a)

Locate the gennaker uphaul/downhaul takeaway elastic (with a 20mm block attached) from the SCS kit.

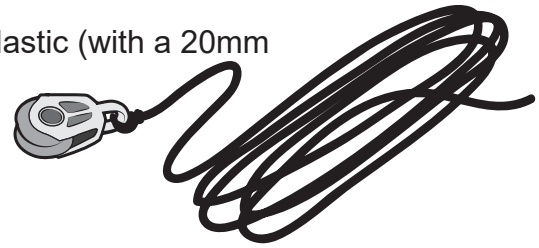

b)

Thread the loose end of the elastic aft from the cockpit, through the tube that runs through the aft locker and out the hole in the transom.

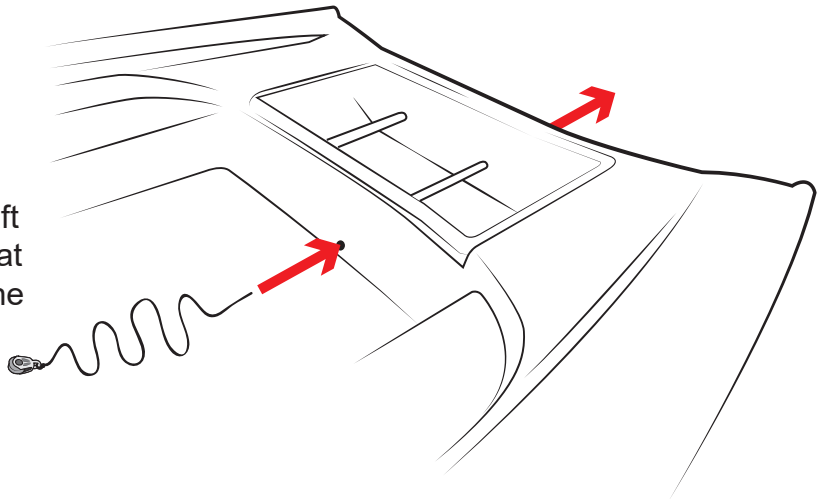

c)

Tie the elastic to the eyelet on the transom, just above the bung.

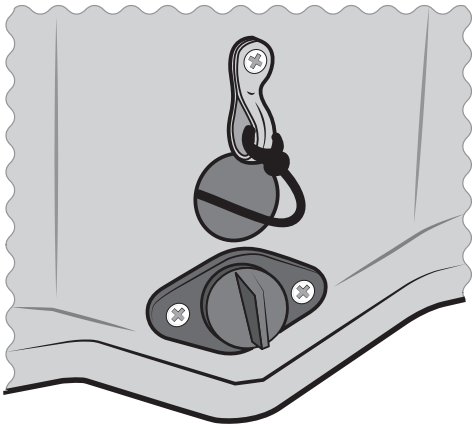

d)

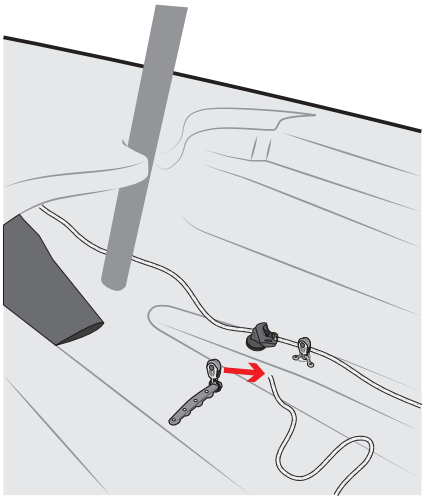

Untie the gennaker downhaul line from the top patch and unthread it from the other patch(es) on the gennaker. Pull the line out of the block on the front port toestrap fitting.

16.1 - Adding the Gennaker Uphaul/Downhaul Takeaways

e)

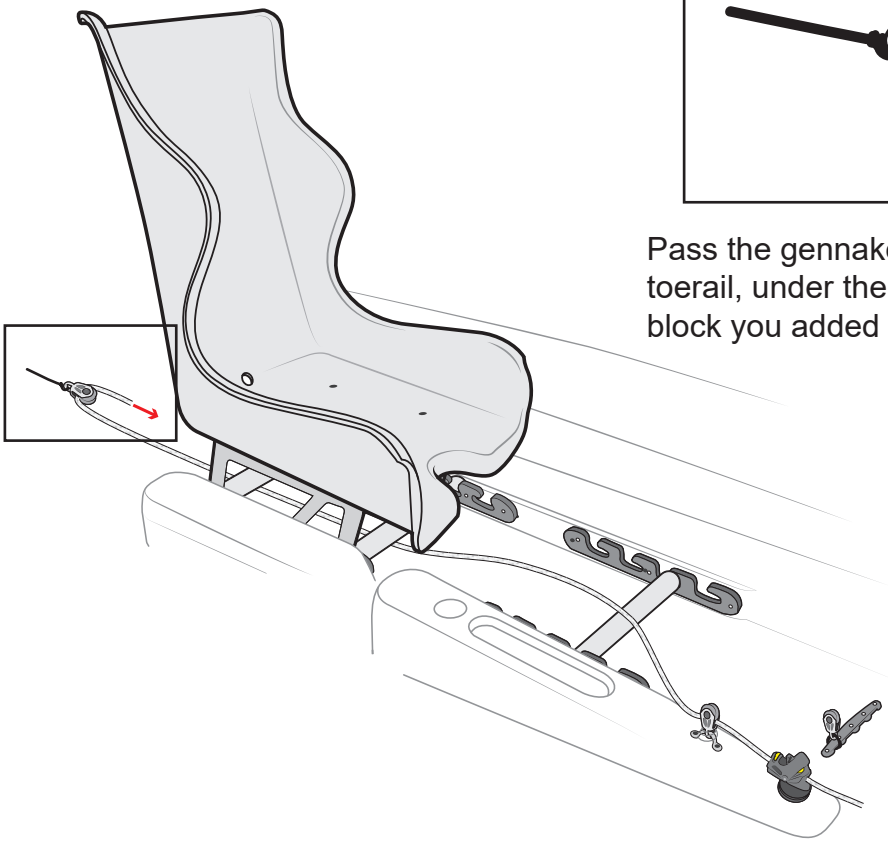

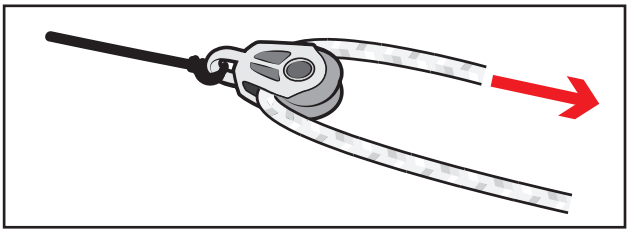

Pass the gennaker downhaul aft over the port toerail, under the port seat and through the block you added in **step b**.

f)

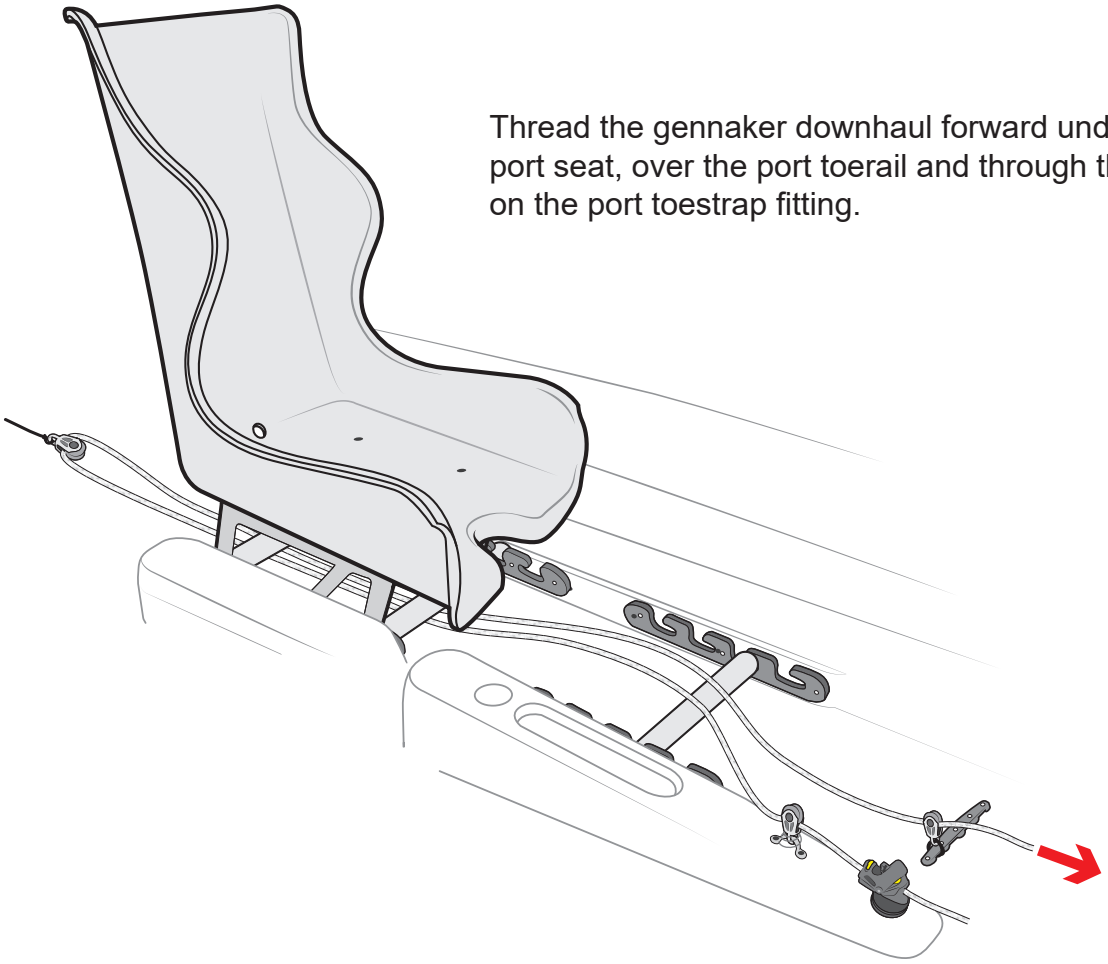

Thread the gennaker downhaul forward under the port seat, over the port toerail and through the block on the port toestrap fitting.

16.1 - Adding the Gennaker Uphaul/Downhaul Takeaways

g)

Locate the P-clip and the plastic ring in the SCS pack.

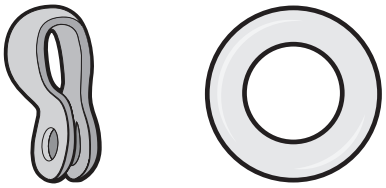

h)

Remove the nut from the bolt in the mast step which supports the front face of the mast foot.

Add a P-clip to the bolt then replace the nut and tighten.

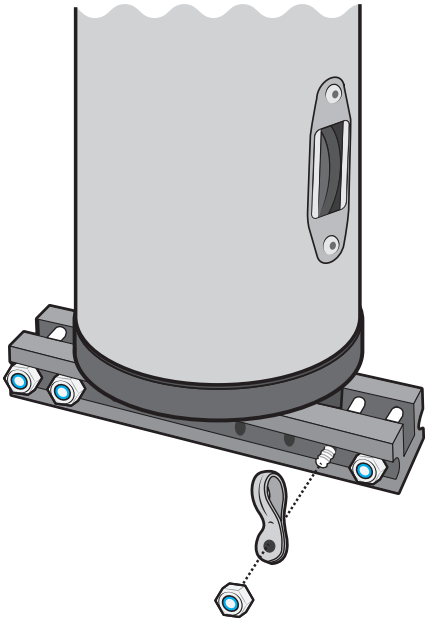

i)

Tie bungy onto p-clip with **knot #1**.

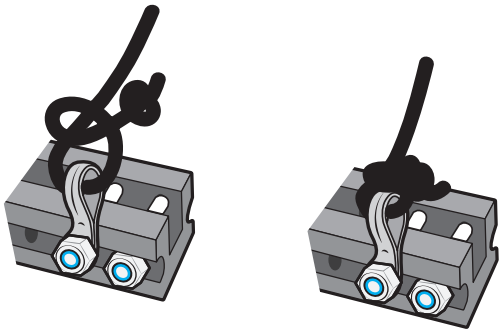

j)

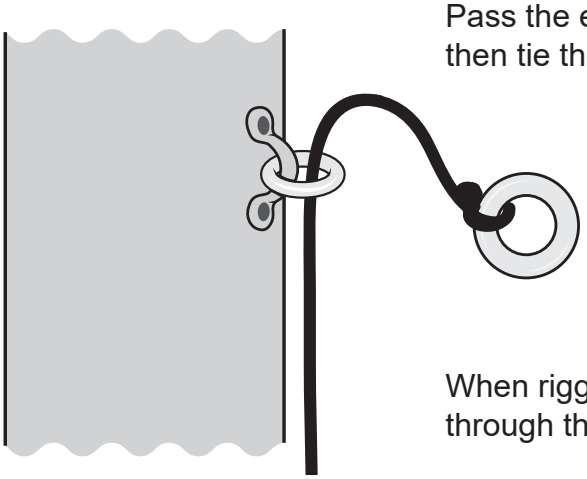

Pass the elastic up the mast and through the metal ring, then tie the end onto the plastic ring with **knot # 1**.

When rigging the spinnaker halyard, pass it through the plastic ring.

16.1 - Adding the Gennaker Uphaul/Downhaul Takeaways

k)

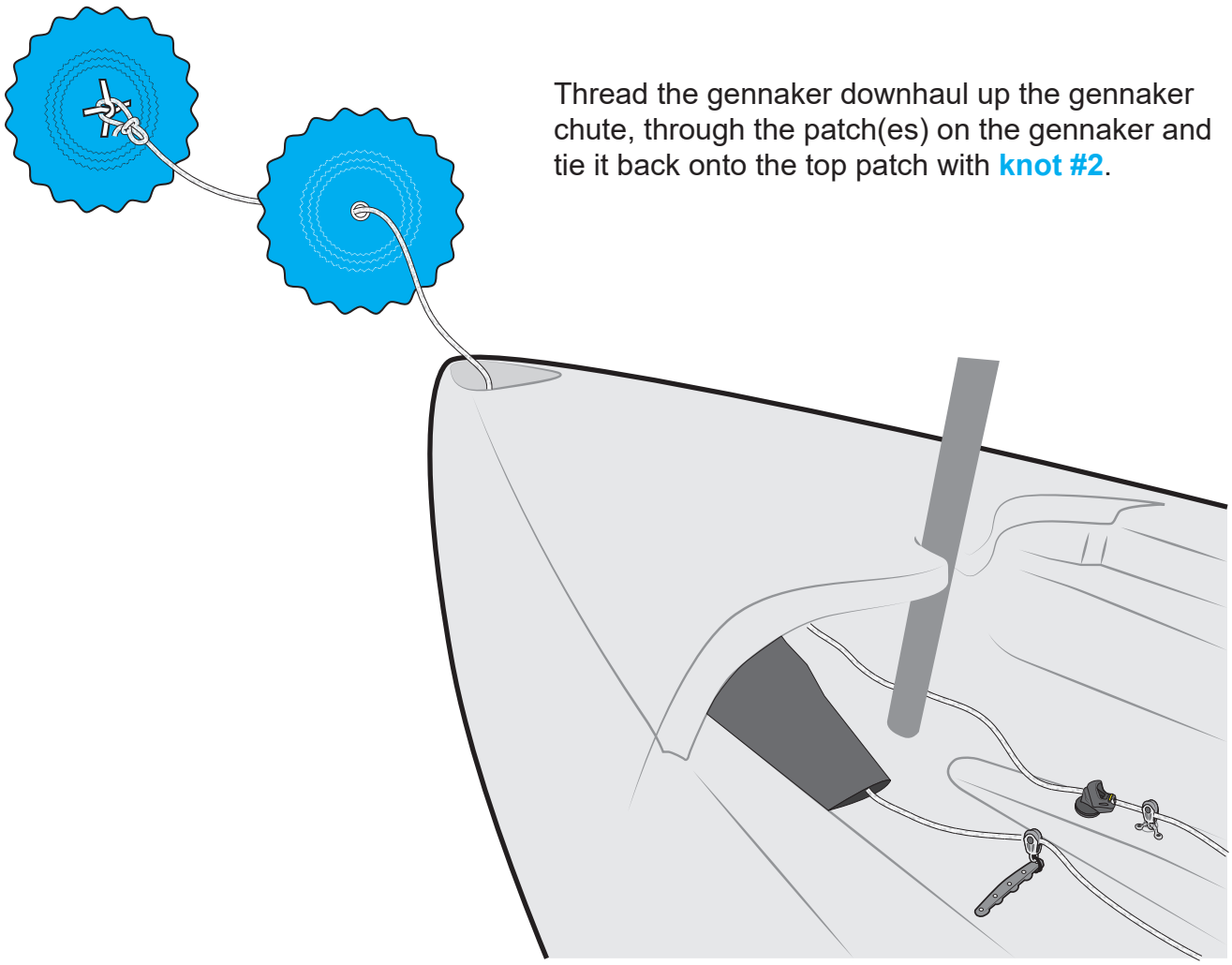

Thread the gennaker downhaul up the gennaker chute, through the patch(es) on the gennaker and tie it back onto the top patch with **knot #2**.

16.2 - Gennaker Sheet Tidies

a)

Locate the 2 x gennaker sheet elastics and 2 x plastic rings in the SCS pack.

b)

Tie the plastic ring onto the of the elastic with **knot #1**.

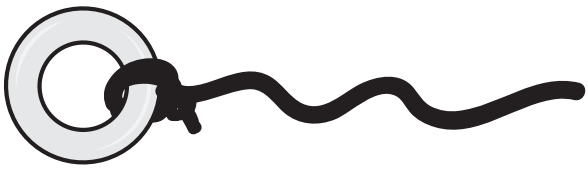

16.2 - Gennaker Sheet Tidies

c)

Pass the other end of the elastic through the deck eye on the side tank (just aft of the steering handles) in an aft direction.

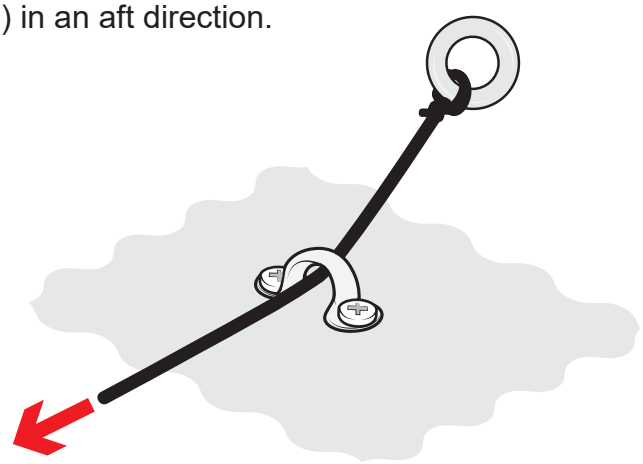

d)

Pass the tail aft and tie it to the deck eye at the back of the side tank with **knot #1**.

e)

Repeat on the other side of the boat.

f)

Untie the knot between the tails of the gennaker sheet. Pass one end through each plastic ring then tie back together.

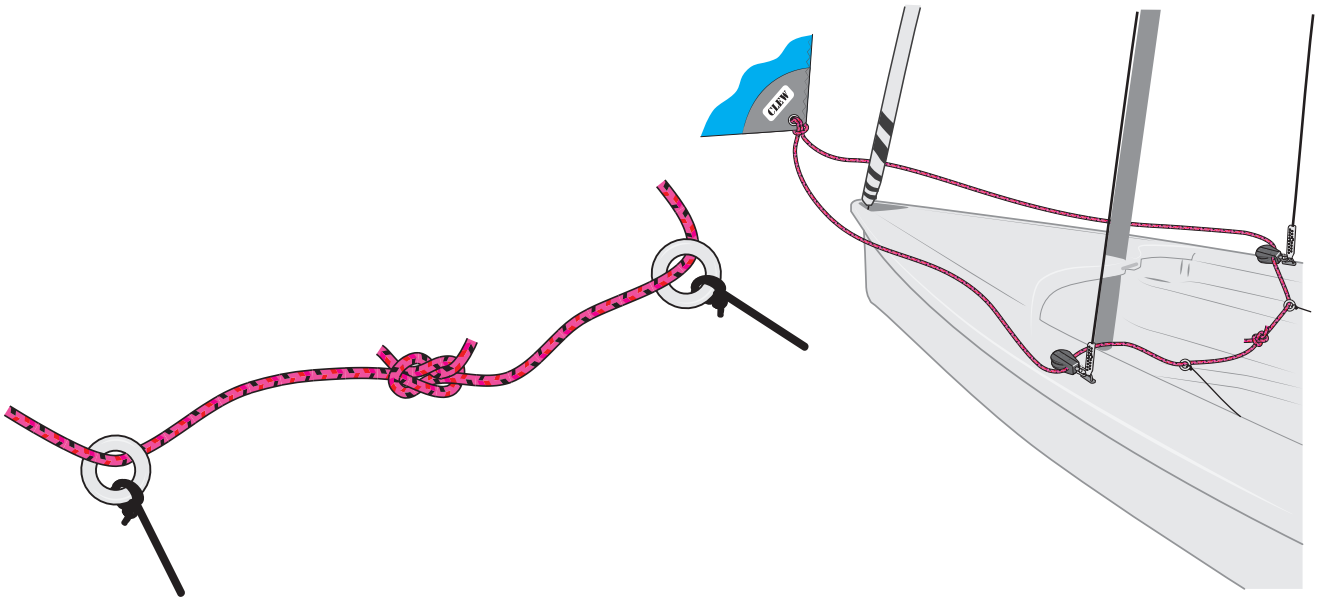

RS venture connect

Power Assisted Steering and Mainsheet V2

DAME OVERALL WINNER 2017

PLEASE FOLLOW RIGGING GUIDE IN CORRECT ORDER

RS venture

17 - Pack contents - Seated Control System

		QUANTITY
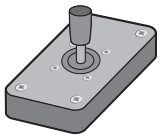	Hand controller (Joystick)	1
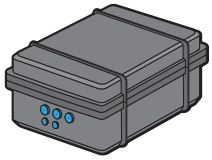	Waterproof Control Box	1
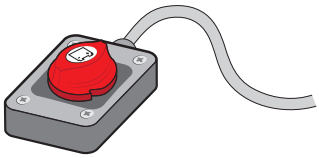	Power Switch	1
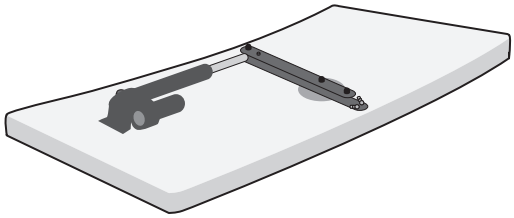	Rear cockpit hatch cover with ram	1
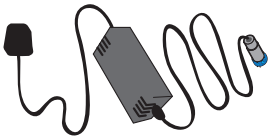	battery charger	1
	control arms	2
	locknuts	2
	locknuts reversed thread	2
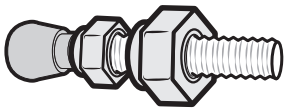	Ball Joints / Quick release assembly	2
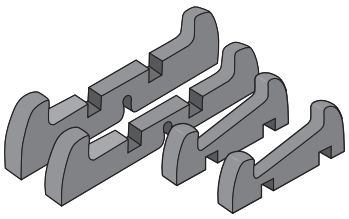	Rear hatch tray foam components	2 long 2 short
	Sachet of jointing compound	1

17 - Pack contents - Power Boom

	Power boom	1

1c - Pack contents - Sip / Puff Controller

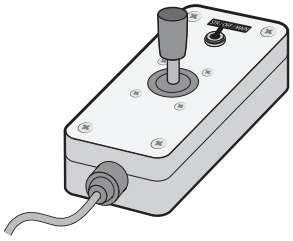	Joystick controller box	1
	Sip / puff headset with clear plastic pipe	1

18.1 - Cutting the rear hatch

In order to fit the Power Assist kit it is necessary to cut a section out of the rear tank hatch to allow the wires to exit.

a) Measure carefully and mark the area to be cut.

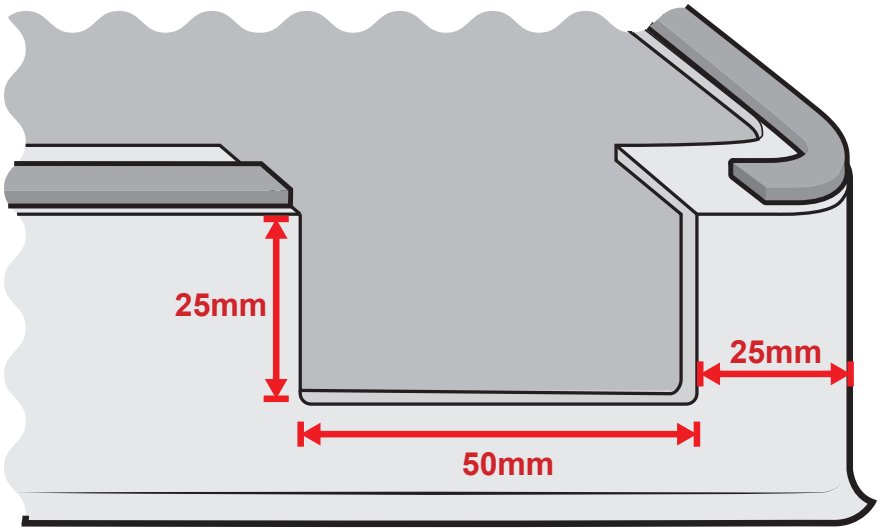

Cut the rear tank hatch as shown.

b) Round off any sharp corners with a file.

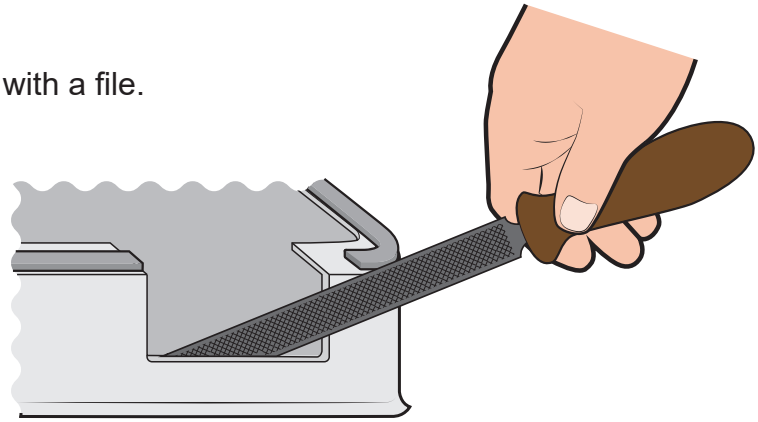

c) Stick the rubber trim into position with Sikaflex

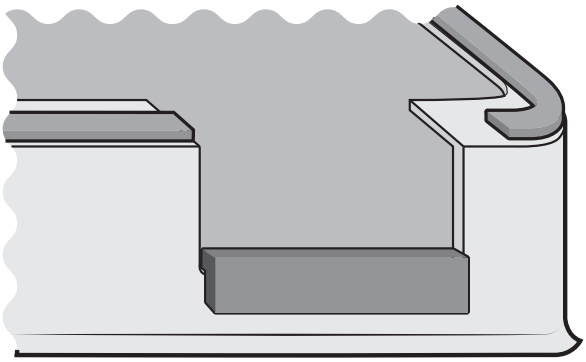

Note: The lid comes supplied with the cutout and rubber trim in place.

18.2 - Assembling the foam tray

a)

Locate the foam tray components from the pack.

Note the two long pieces are different heights.

Lay the two long pieces on the floor and slot the two small pieces into them, ensuring that the low end of the slanted short piece joins up with the low long piece and vice versa.

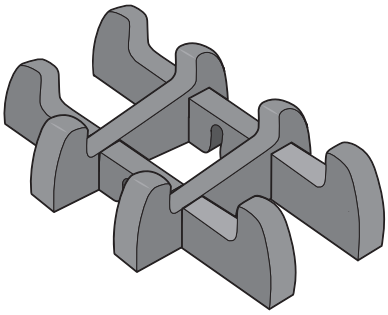

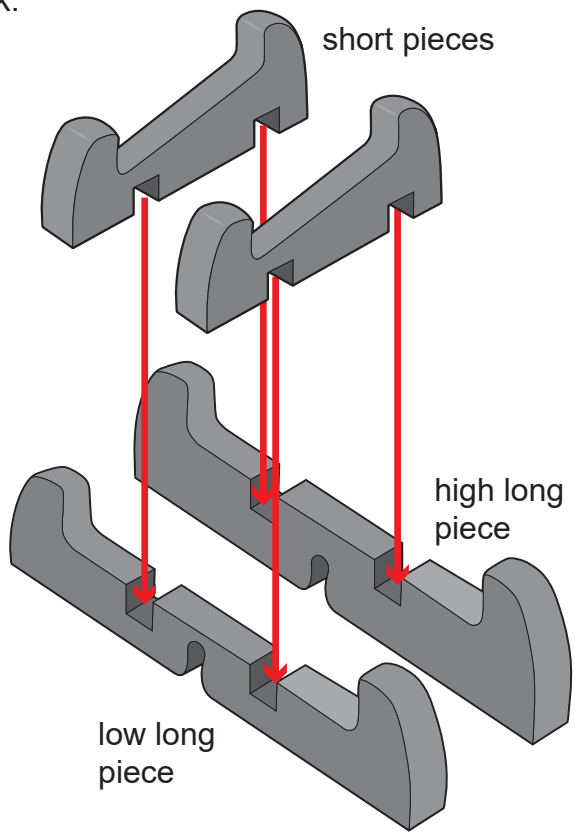

b)

Place the assembled foam tray into the rear hatch, with the thin long piece towards the stern.

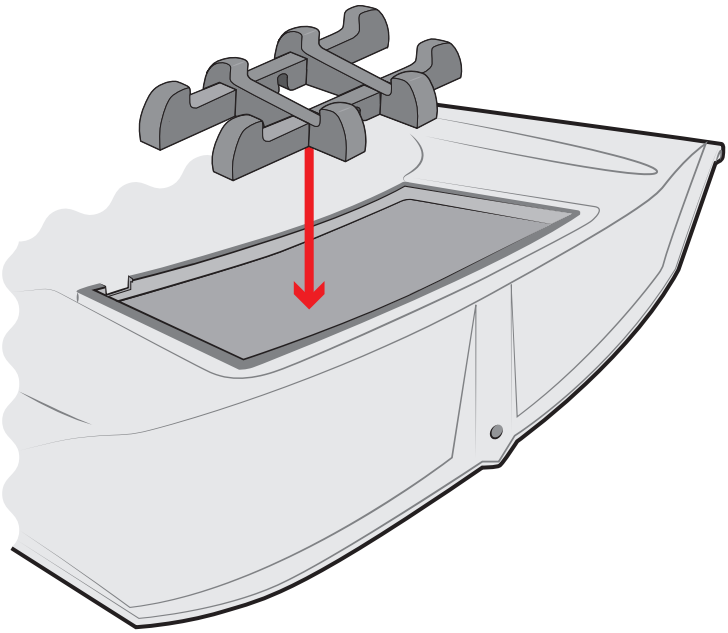

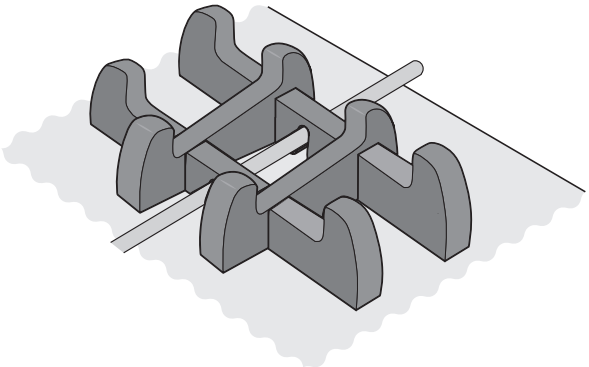

The foam tray slots over the central tube in the rear locker.

18.3 - Control arms

For this section you will need:

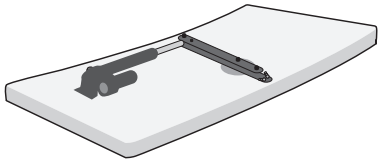

Rear cockpit hatch cover with ram

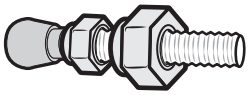

2 x ball joint / quick release assembly

2 x control arms

2 x locking nuts

2 x locking nuts (opposite thread)

jointing compound

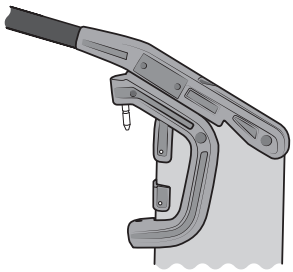

2 x rudder stocks

a)

Unscrew the white plastic lugs from the underside of the rudders.

You may need to use pliers to unscrew the plugs as they are difficuly to grip.

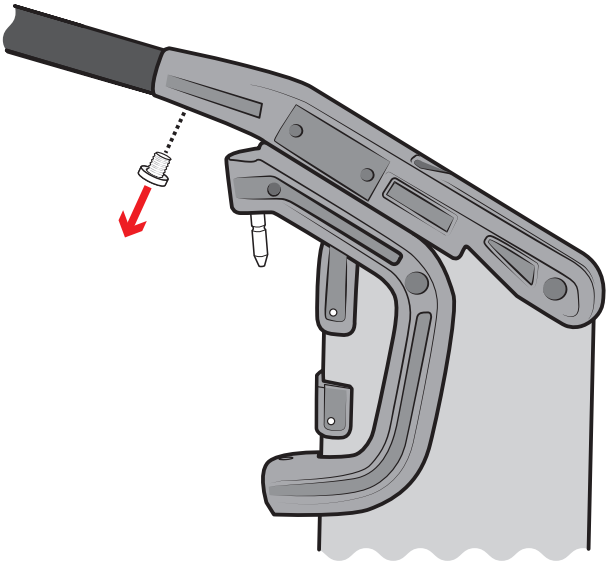

b)

Apply jointing compound to the threads of the ball joint.

Be very careful with the jointing compound - It gets everywhere and stains clothing. Wearing gloves is recommended.

c)

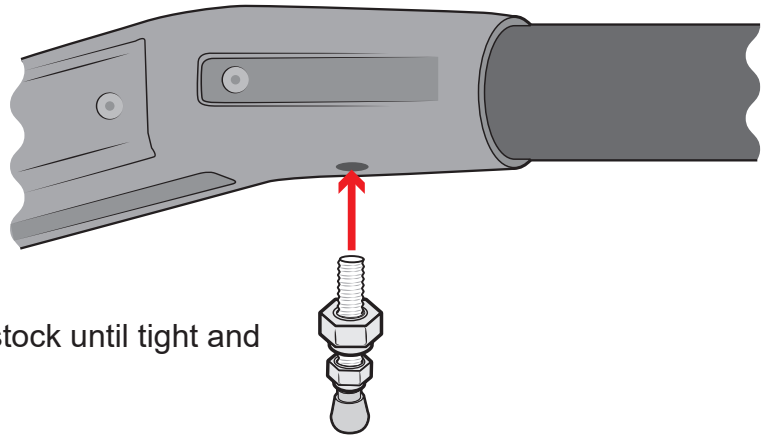

Thread the ball joint into the rudder stock until tight and tighten lock nut to secure.

d)

Spin 1 x locknut onto each end of the control bar. Note one end of the bar has a reverse thread. Select the correct nut accordingly.

e)

Select the correct end threaded end of the control bar and wind it on two turns into the inboard ball joint fitting (pre-fitted to the black locker lid actuation levers).

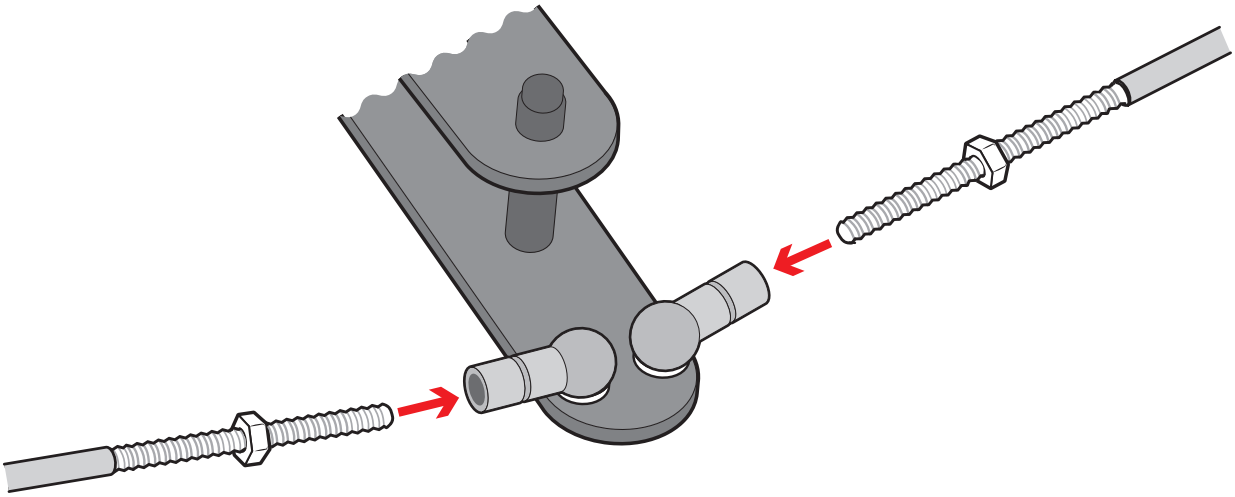

f)

Fit the quick release control rod end onto the outboard end of each control arm. Wind it on two turns.

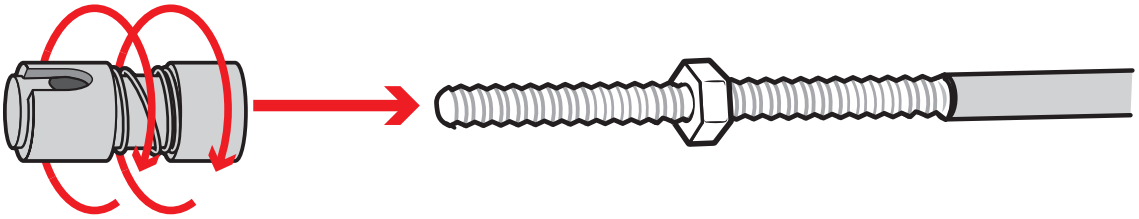

Leave the lock nuts slack for the time being.

18.3 - Control arms

g)

Lift control box into rear hatch

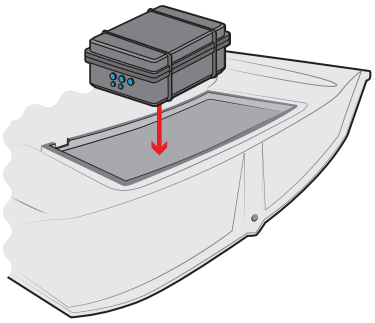

h)

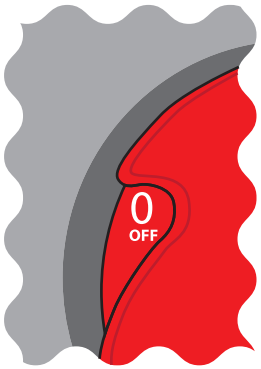

Connect the power switch to the control box and make sure it is in the ‘off’ position.

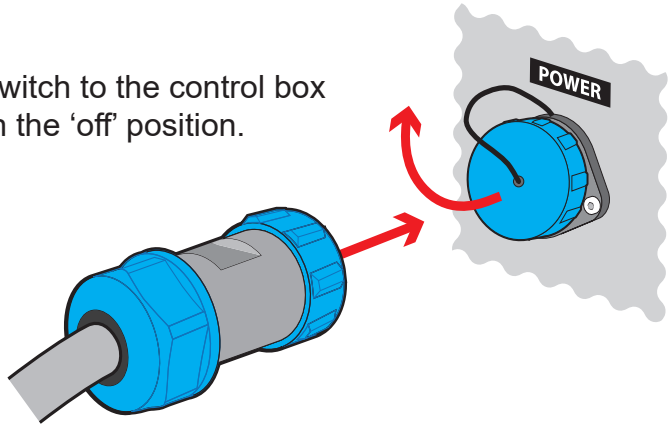

i)

Connect the hand controller (joystick) and steering to the control box.

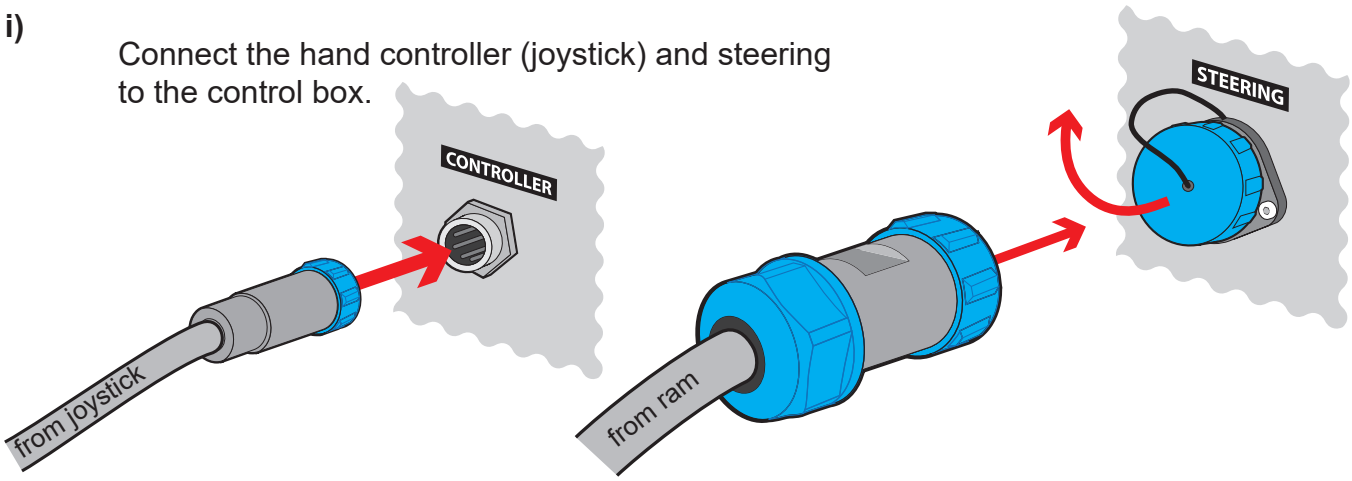

j)

Lead all wires through the lid cut out.

Fit the lid and lock it in position.

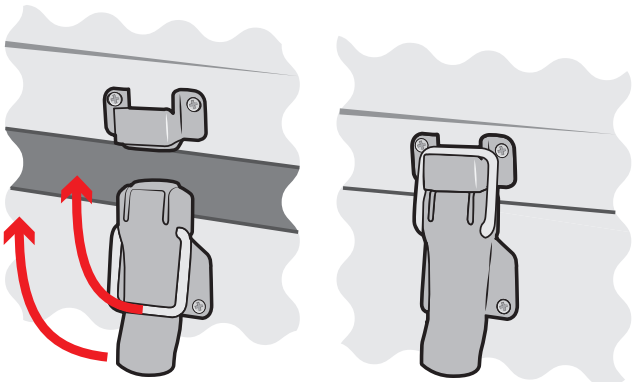

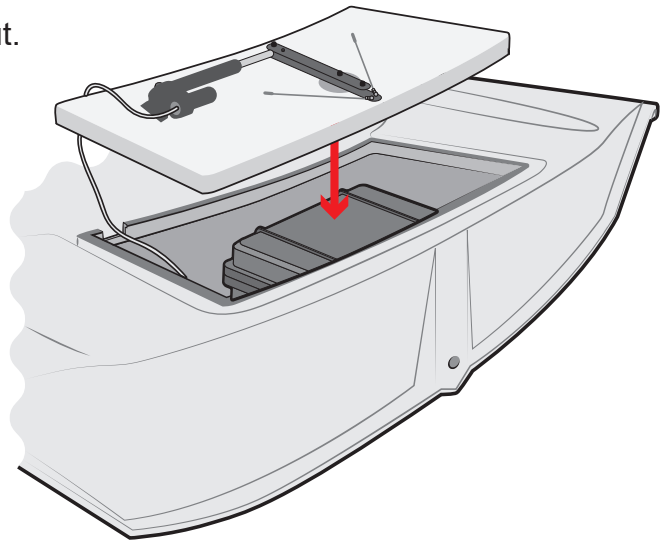

k)

Attach the twin rudder system to the transom.

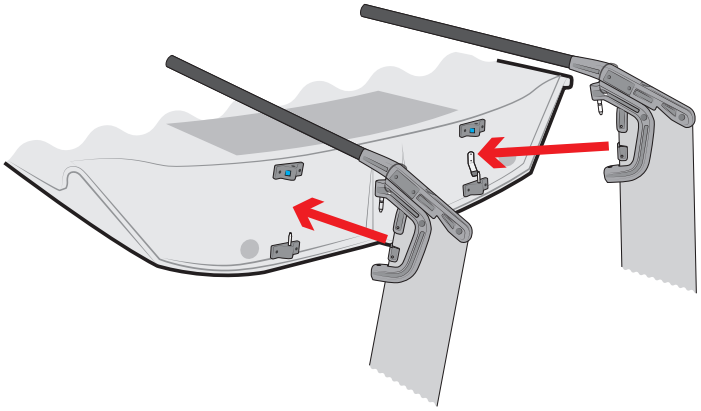

l) Fit the main connecting bar between the tiller ends.

m)

Make sure the ram actation levers are set on the center line. This is done by eye siting from behind the boat. The ram can be moved by hand with a bit of effort by pulling or pushing on the black actation levers mounted on the hatch lid.

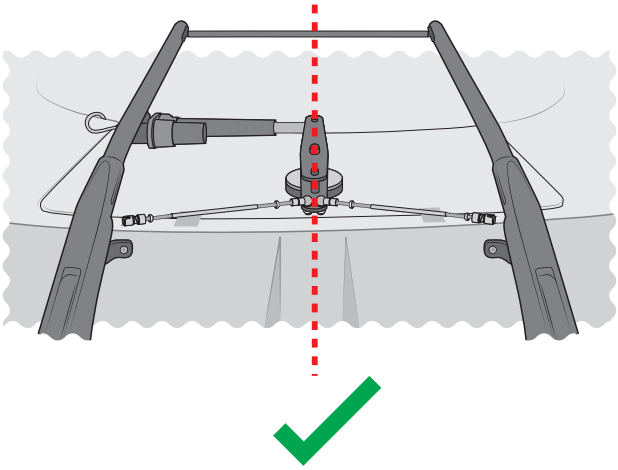

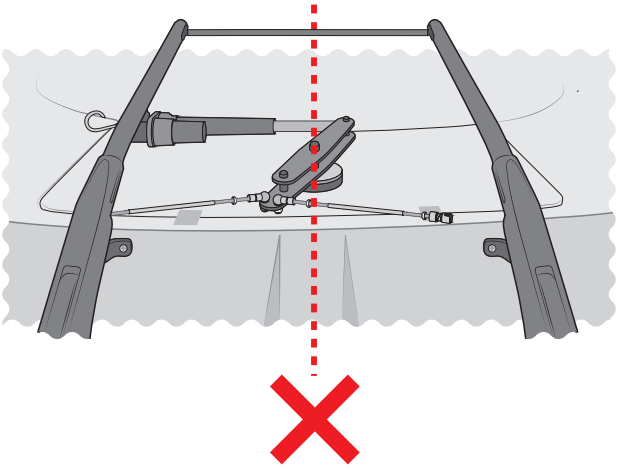

n)

Set the rudders in the locked down position.

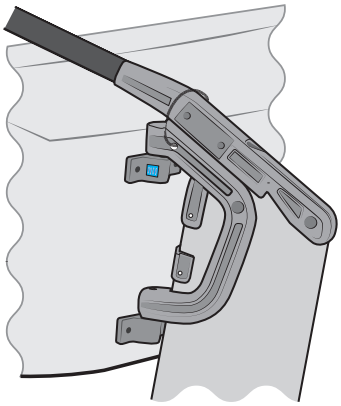

o)

Make sure the tillers are equidistant to the center line.

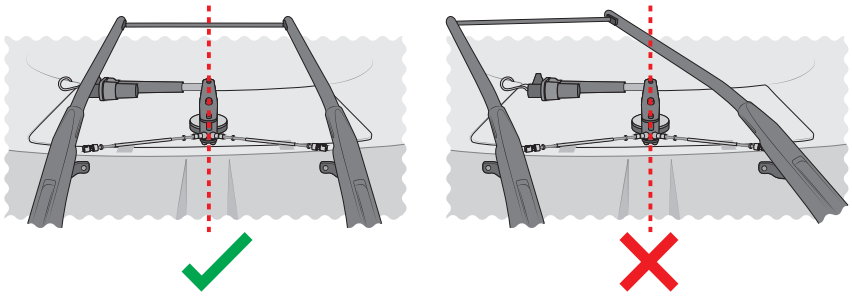

Make sure the rudders are clear of the ground.

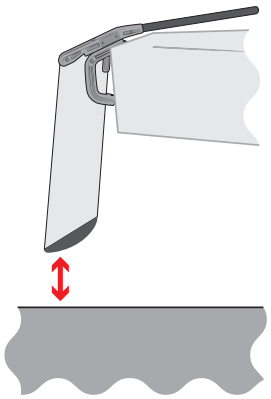

Attach one of the quick release control rod ends onto the ball joint under you fitted to the underside of the tiller.

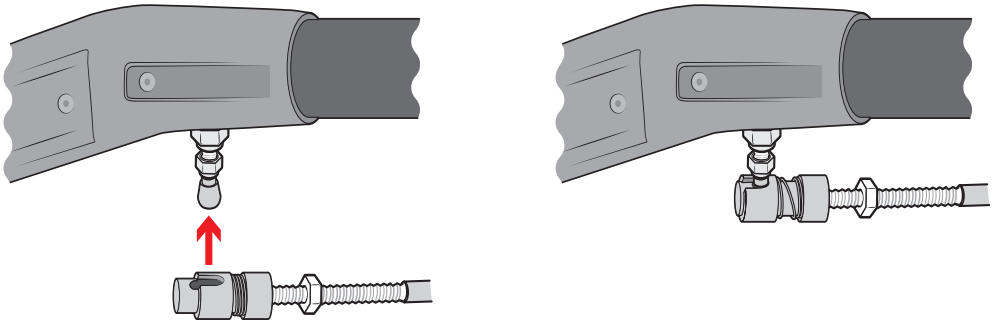

p)

Visually check the tiller you attached is pointing just inside the center line (The twin rudder system has a slight amount of toe in when at rest).

Twist the control rod to move the tiller towards or away from this slight toed in position.

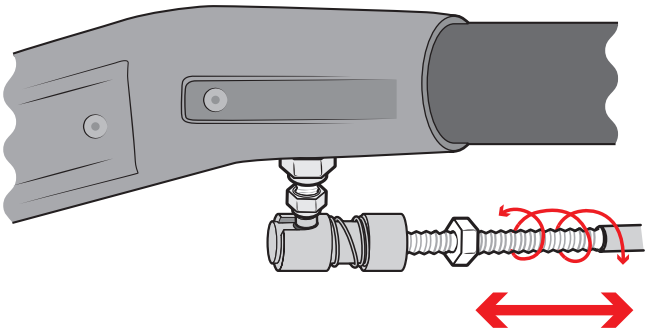

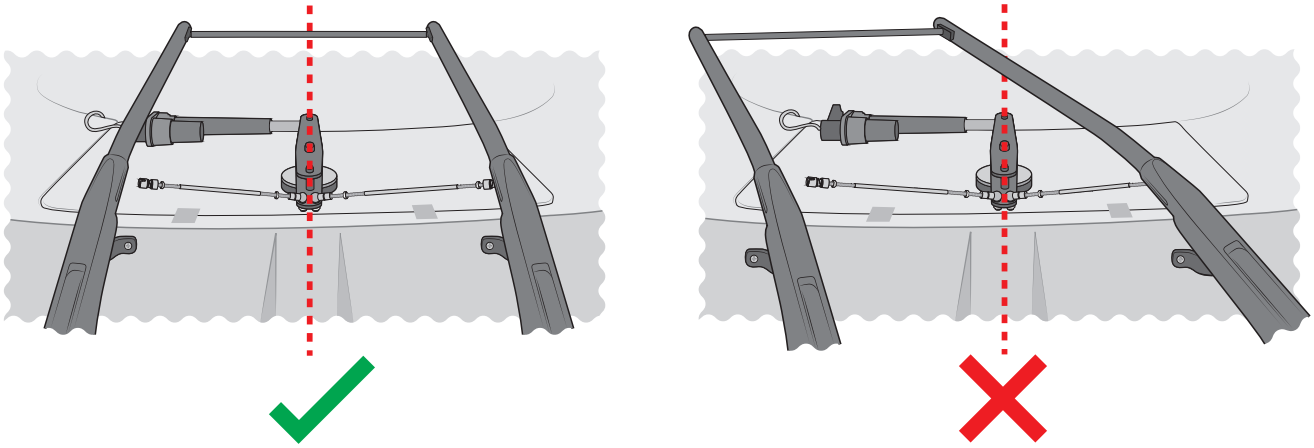

q) Connect the quick release end fitting to the other side. If required hold the quick release end fitting and twist the control rod to move the end fitting in or out board.

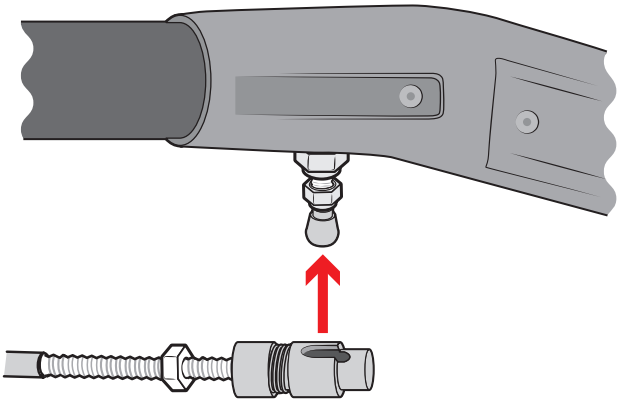

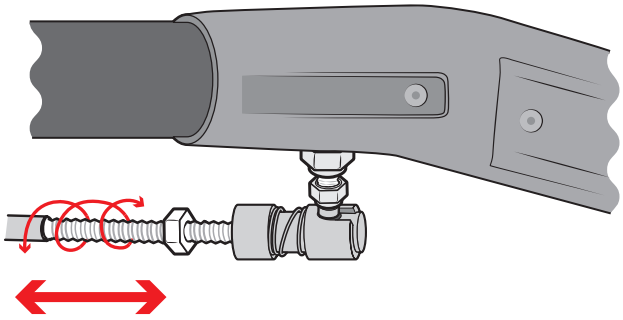

r) Once fitted, double check the tillers on both rudders are just slightly toed in to the center line.

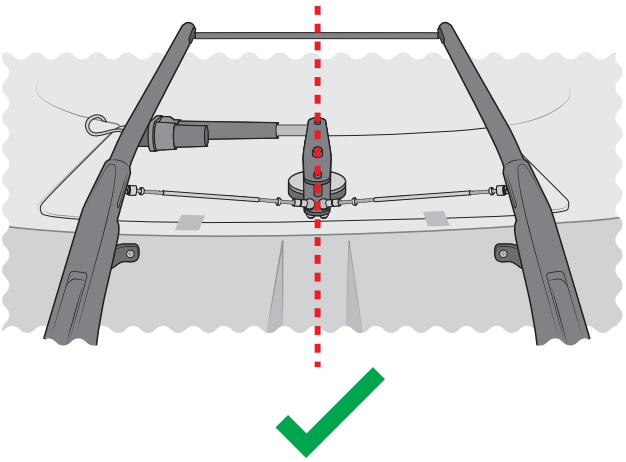

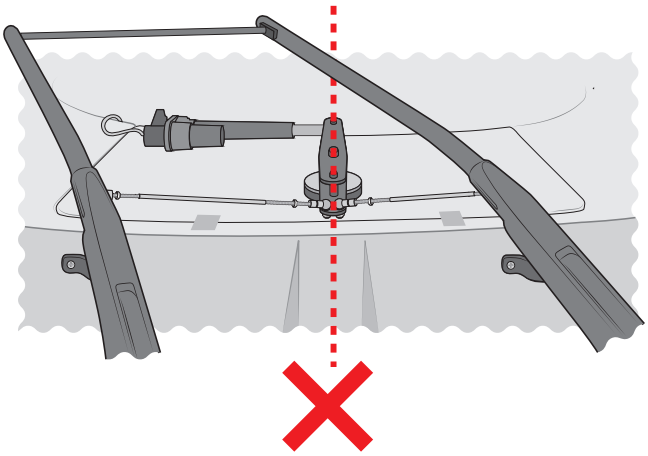

Adjust as necessary by twisting the control rods.

When happy tighten up the locking nuts to hold the end fittings in place.

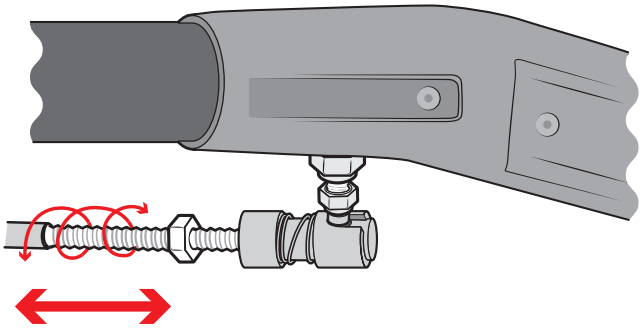

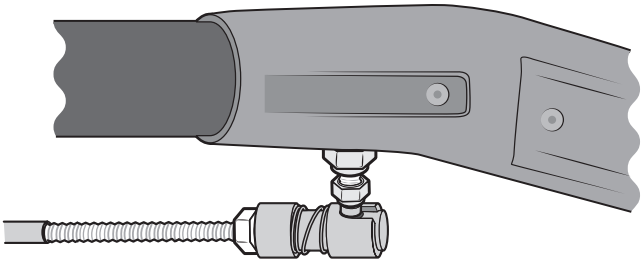

s)

Make sure the rudders are clear of the ground.

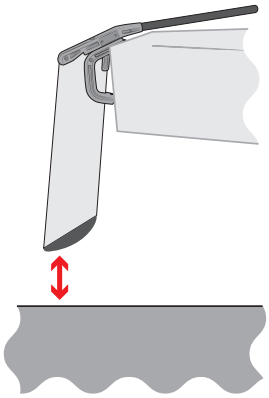

Turn the power switch on and test full articulation of tillers left and right.

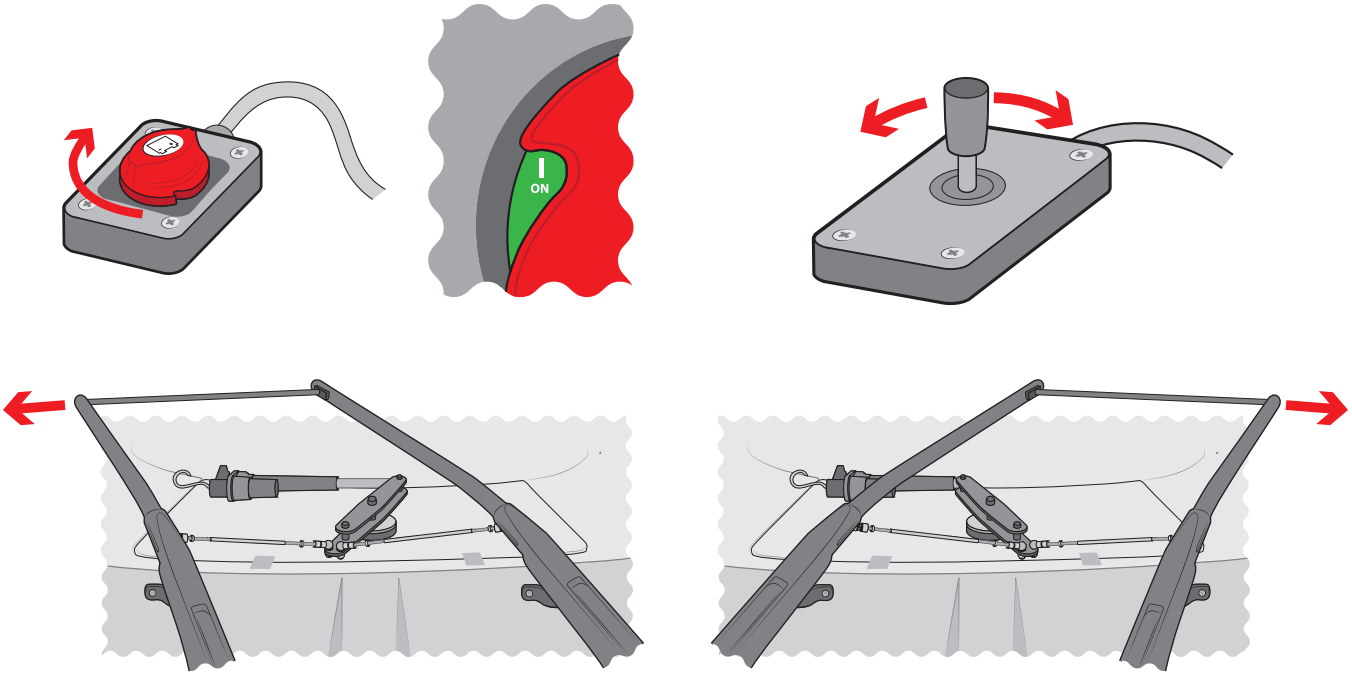

RS venture connect

Seated Control System

19. Power Assist Pack & Electronic Joystick Steering Operating Guide

PLEASE FOLLOW RIGGING GUIDE IN CORRECT ORDER

RS venture

19.1 - Preparation

Due to the complex nature of this product it is vital that all sailing sessions have an able bodied person onboard the boat to assist in the event of mechanical or electrical failure.

The Power Assist Package can be used in many scenarios and this guide only gives generic advice for its operation. Owners and operators should take onboard the spirit of this advice and apply it to their unique environment.

a)

Ensure the batteries are fully charged.

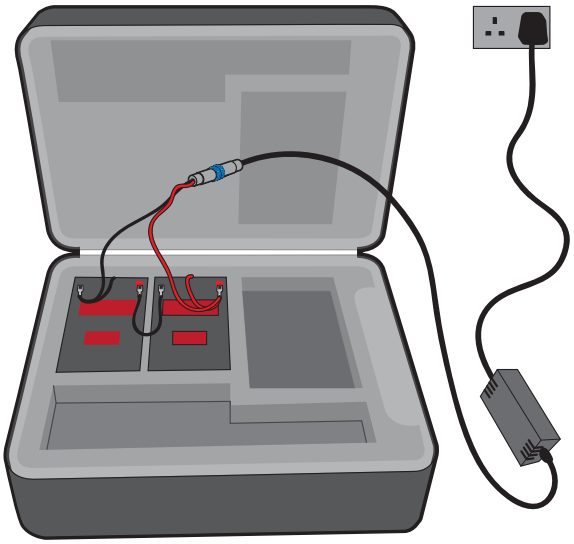

a)

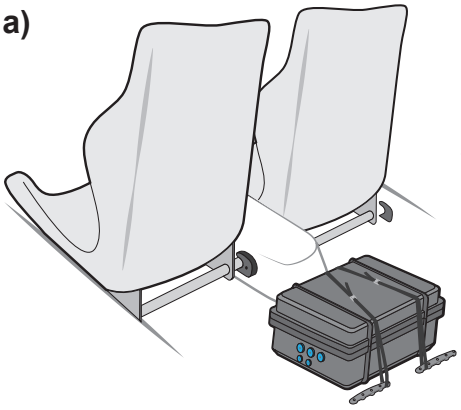

Onshore / alongside a dock, fit the control box into the rear hatch or secure firmly to the cockpit floor behind the seats.

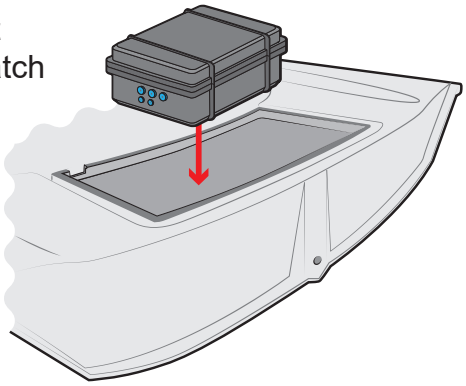

b)

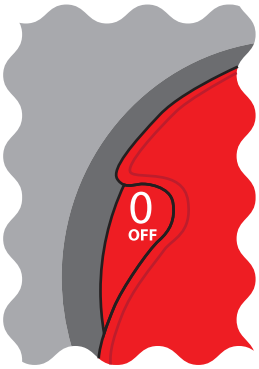

Connect the main power switch, make sure it is firmly in place and the power is off.

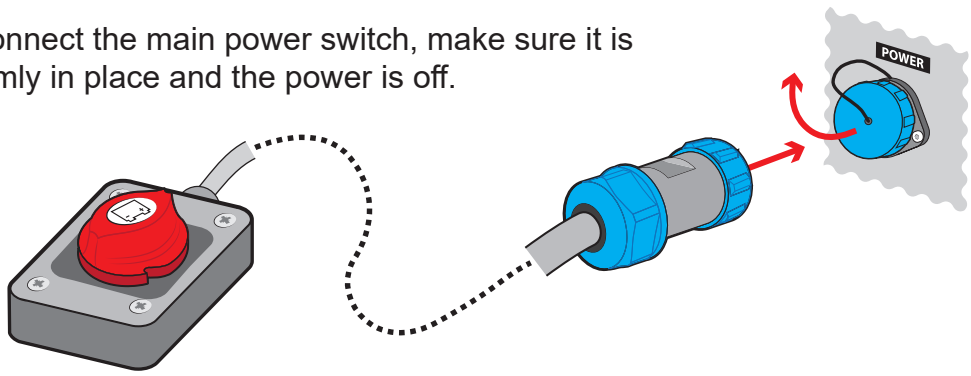

c)

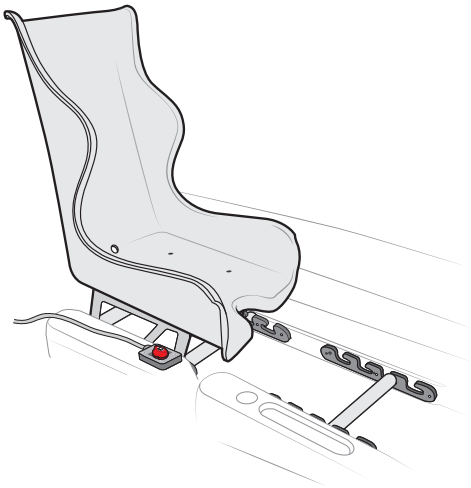

Run the main power switch out of the rear hatch and locate in its desired position. The lead is long enough to feed between the seats and be mounted on the main control plinth. Some people may prefer the switch in their lap.

d)

Connect the hand / sip and puff controller to the main control box. Run its lead out of the rear hatch and place in the desired location. Again this lead is long enough for many options.

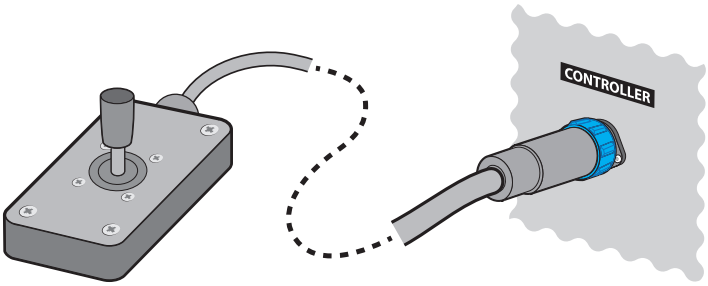

e)

Position the locker lid slightly to starboard but on top of the hatch and connect the ram power lead, making sure the lead routes through the cutout.

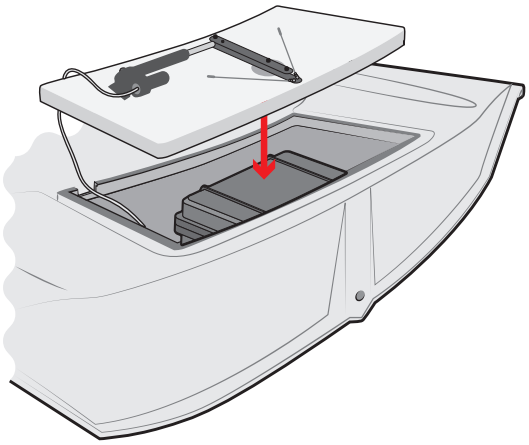

f) Make sure no cables are trapped and carefully position the lid in place.

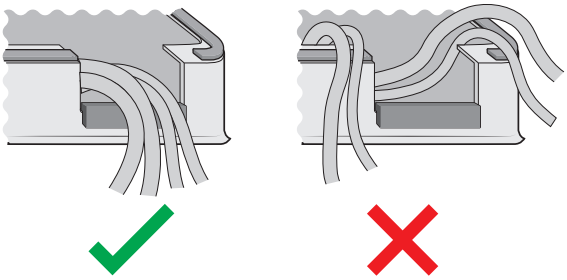

Secure the lid in place with the latches.

19.2 - Ashore

a) Fit the rudders, connecting bar and tiller extension.

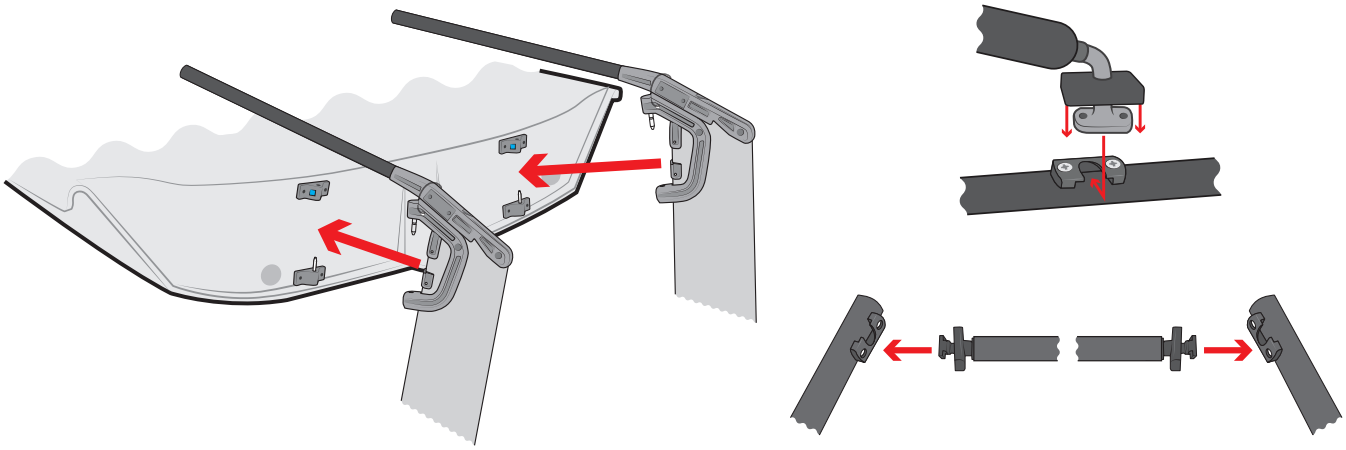

b)

Raise the rudders and lock in position.

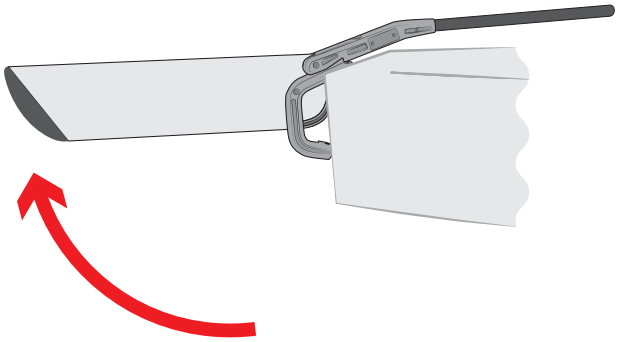

Rudders cannot be stowed in the fully up position if the threaded control bar is connected.

c) Thread the anti-tangle elastics:

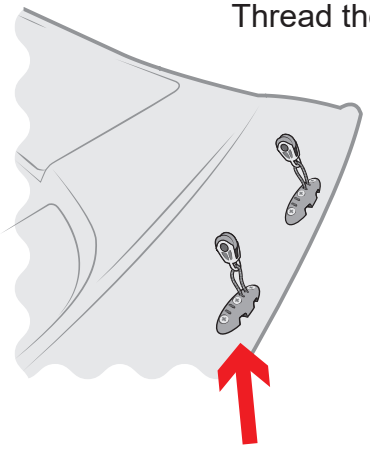

Tie elastic onto forward organiser with **knot #2**.

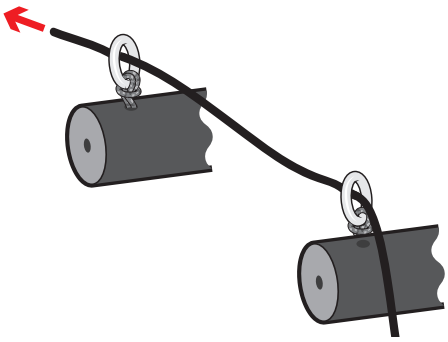

Pass the end across the boat, passing through the rings on top of both tillers, then tie to the forward organiser on the opposite side.

d)

Locate the tiller elastic.

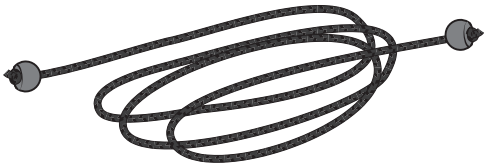

e)

Untie the knot and remove one plastic bobble.

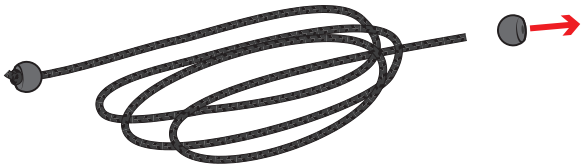

f)

Feed the tiller elastic through both eyelets on the aft face of the cockpit, from starboard to port (leaving one bobble on the starboard side of the boat).

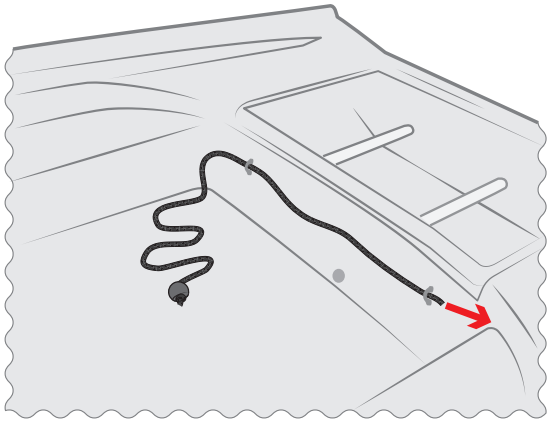

g)

Put the other bobble back on the end of the elastic and tie **knot #3** in the end.

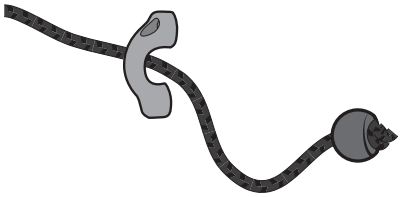

h)

Slide the plastic bobbles through the loops on the ends of the tillers.

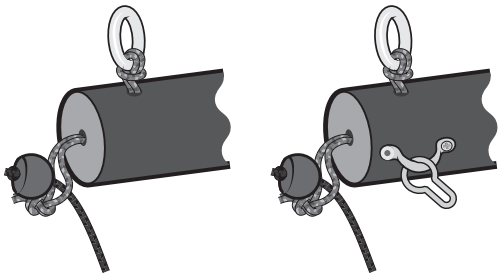

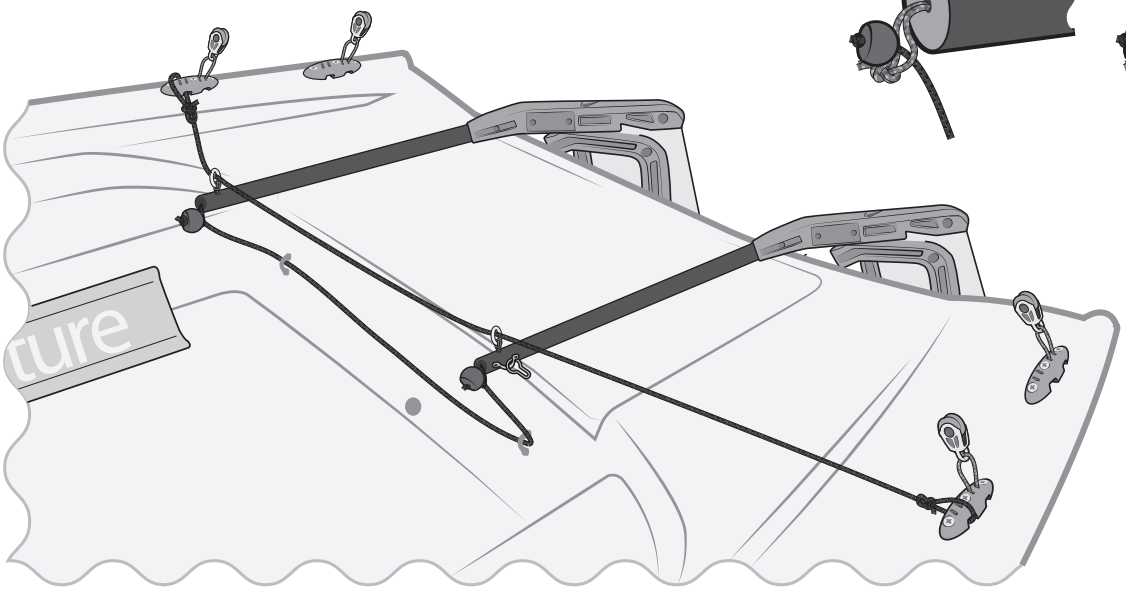

i)

Check all other components are in place and launch the boat.

19.3 - Afloat

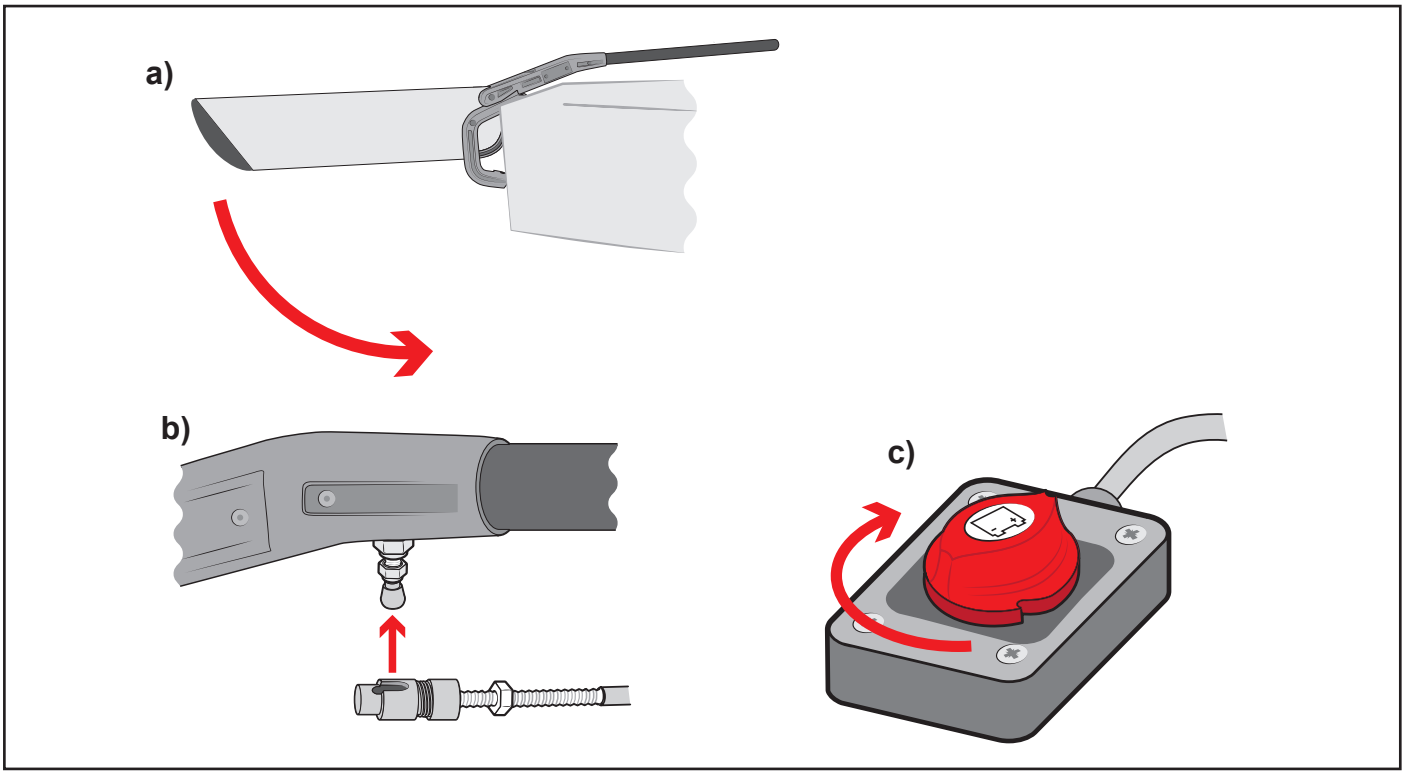

RS venture connect

Seated Control System

20. Power Mainsheet System Operating Guide

PLEASE FOLLOW RIGGING GUIDE IN CORRECT ORDER

RS venture

20.1 - Motor Drum Line

a)

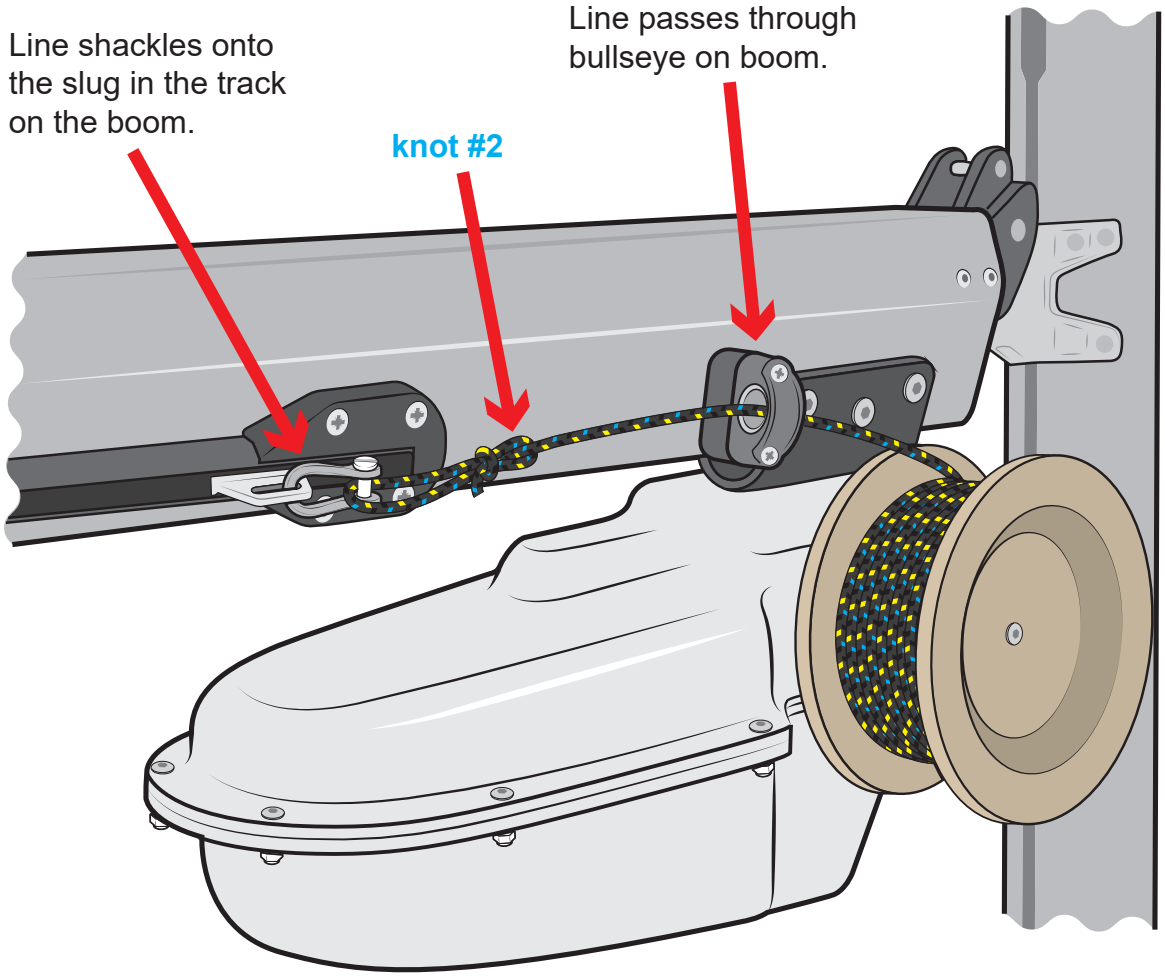

b)

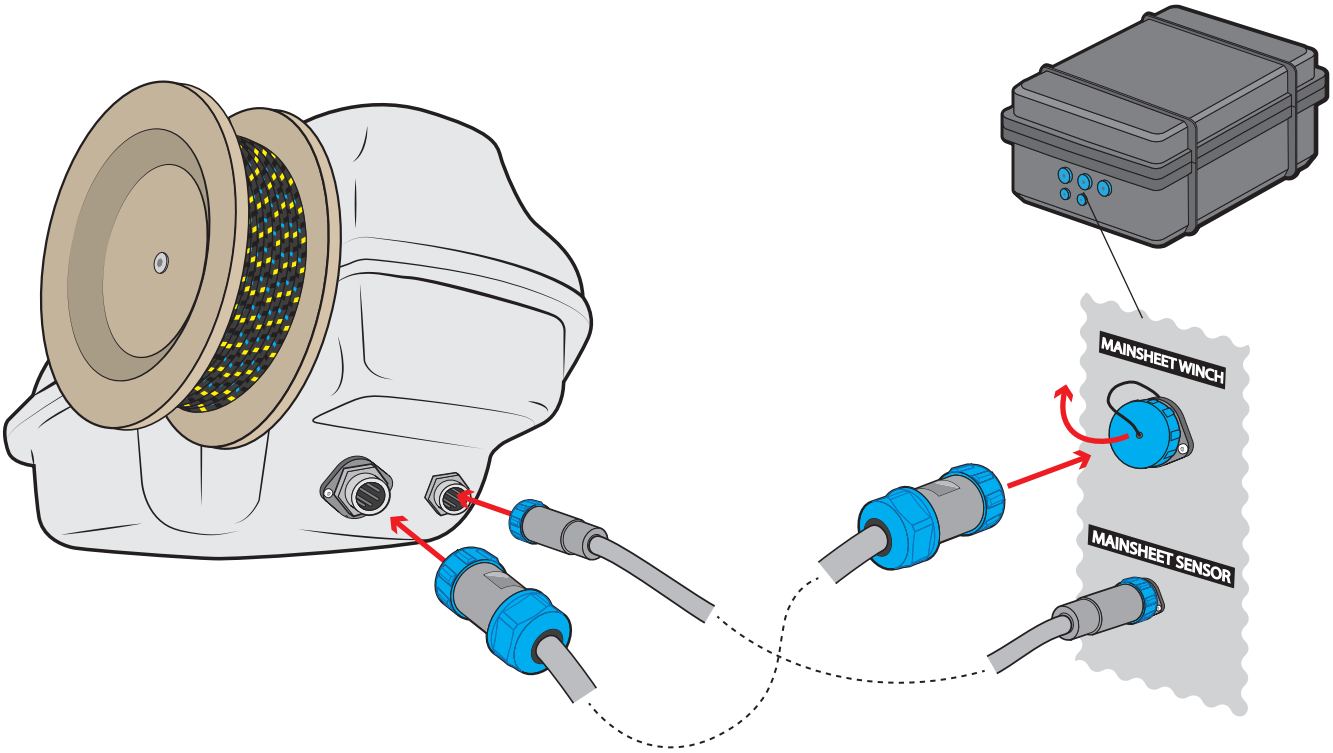

20.2 - Mainsheet System

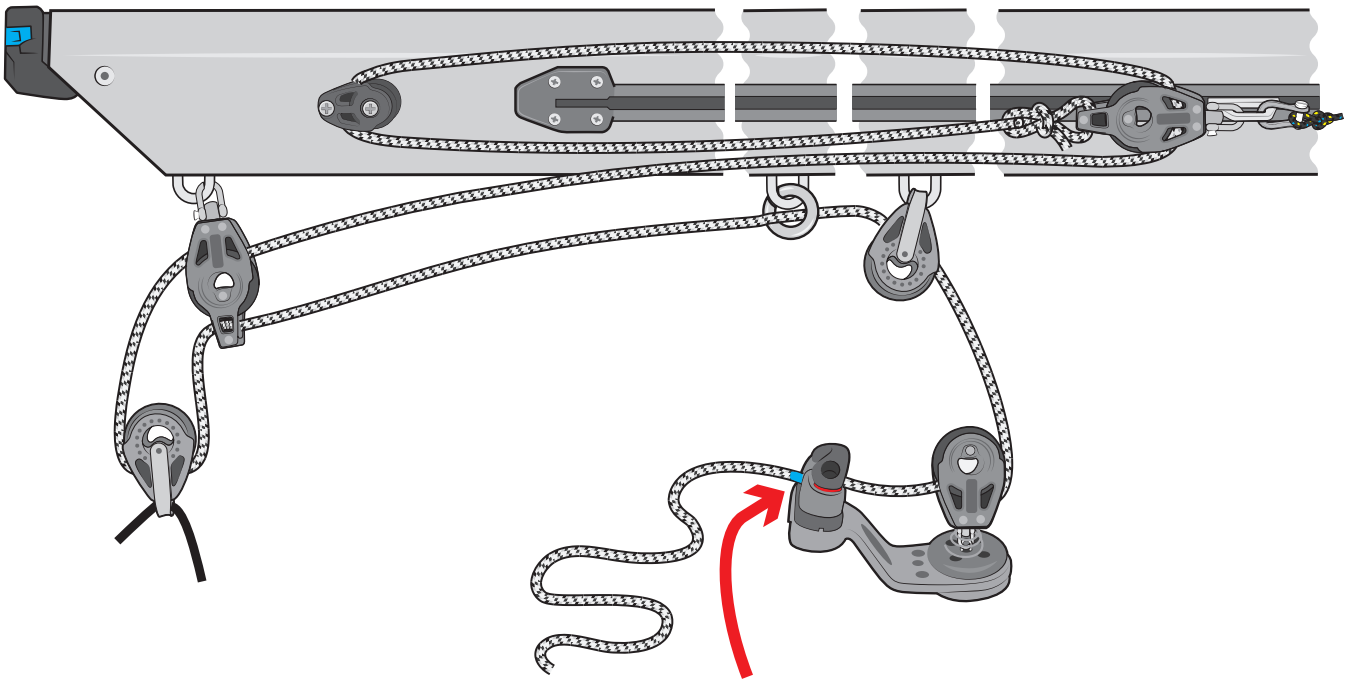

Mark on mainsheet
(See section 4.5 a + b)

It is important that enough mainsheet tail remains in the boat so that the able bodied sailor can override the the drum in the event of power failure.

20.3 - Boom Slug / Track

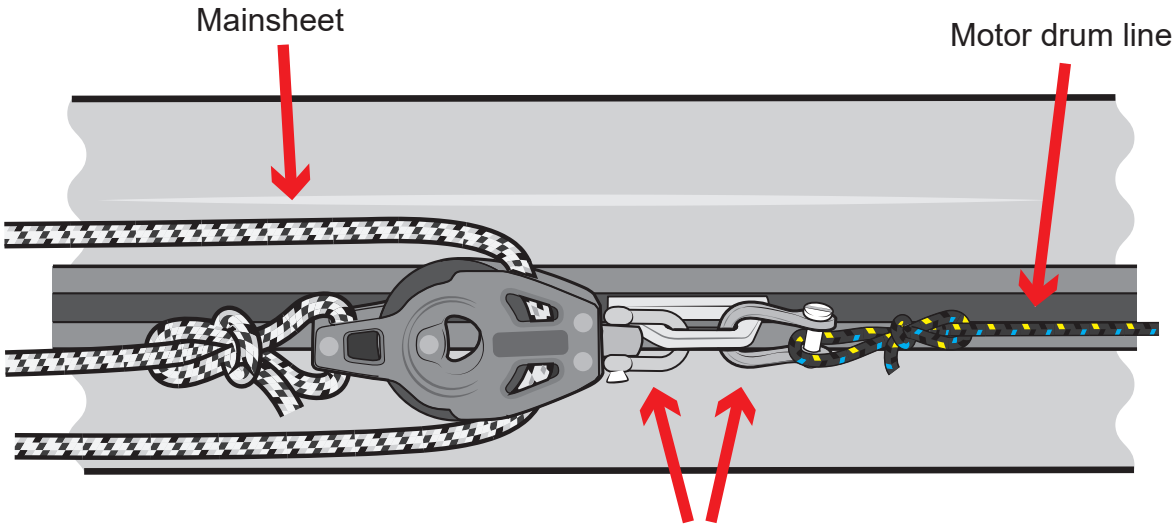

Shackled onto slug in boom track.

20.4 - Elastic Tensioner

a)

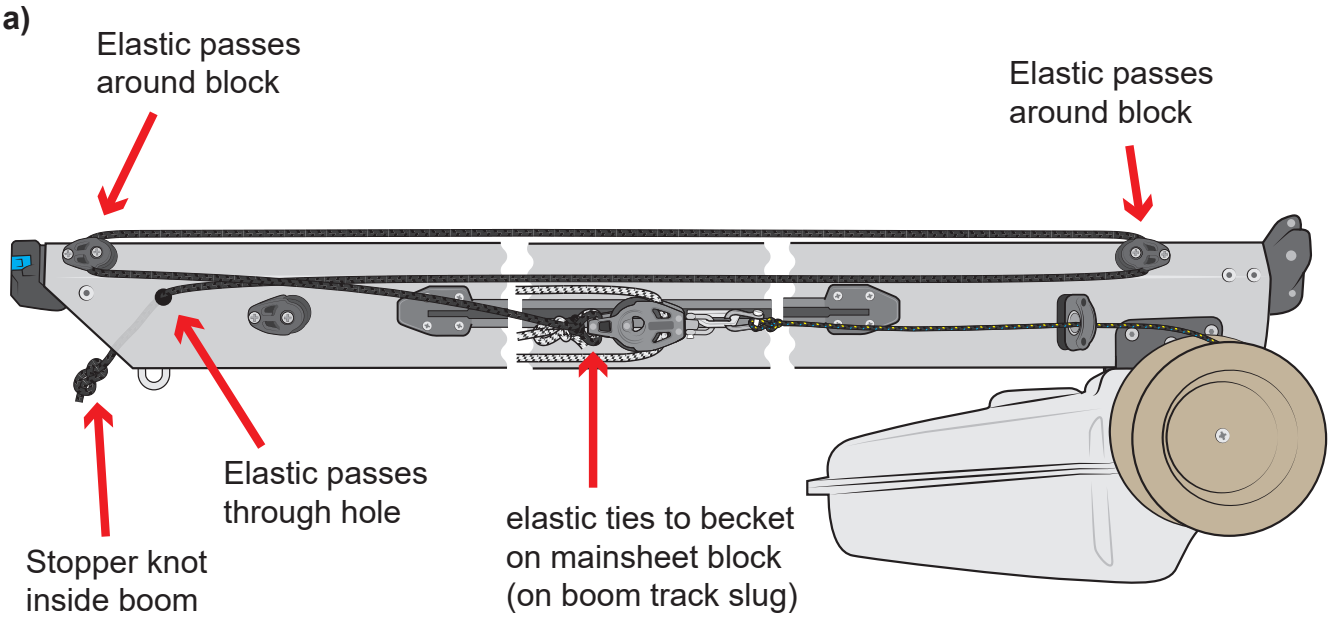

20.5 - Using the Power Boom

a)

Allow the motor to sheet out until the boom almost touches the shrouds then cleat the mainsheet.

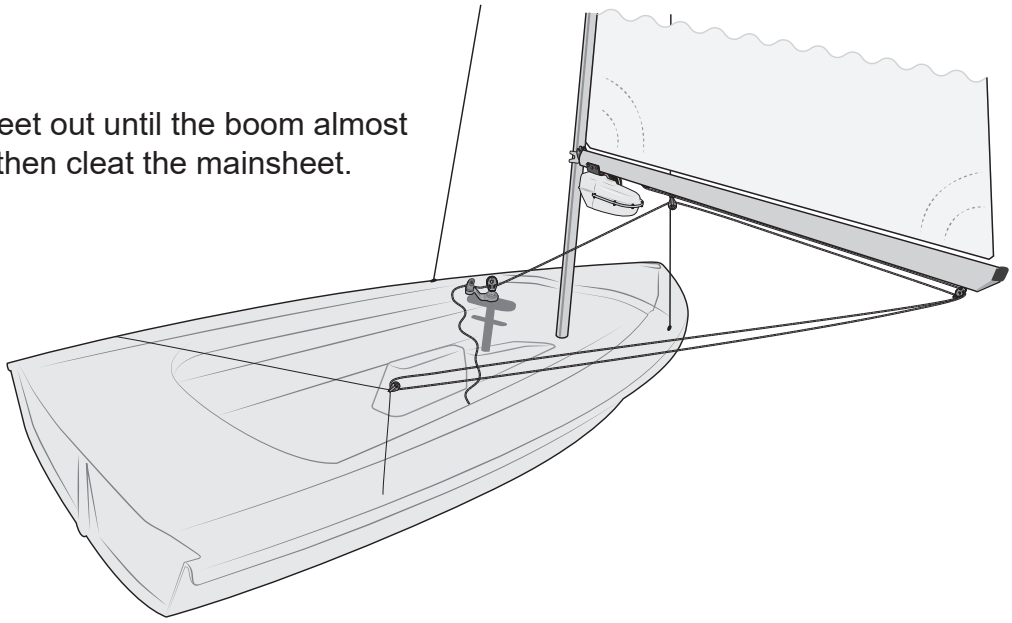

b)

Mark the mainsheet at this point using whipping twine, marker pen or tape.

The mainsheet should always be cleated at this point when the power boom motor is in use.

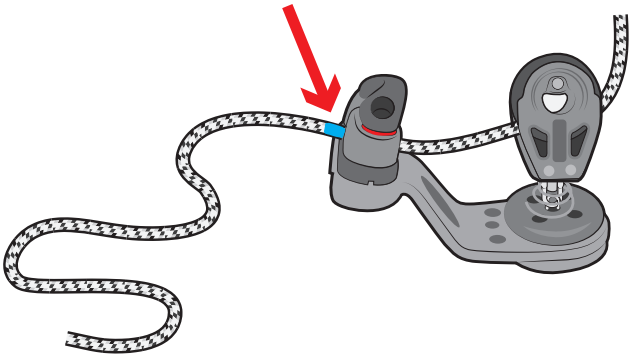

20.5 - Using the Power Boom

c)

The able bodied sailor can adjust the mainsheet by hand if necessary (For example an emergency sheet out in a gust) but the mainsheet **must** be returned to the marked position before the motor is used.

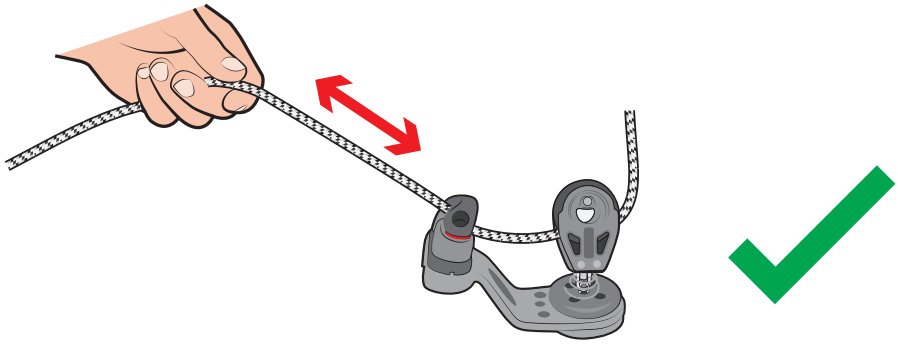

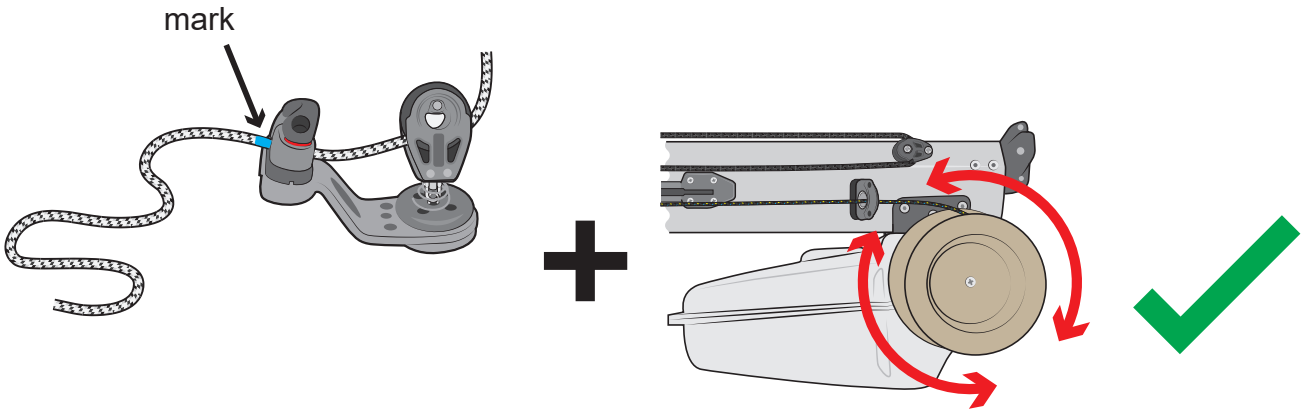

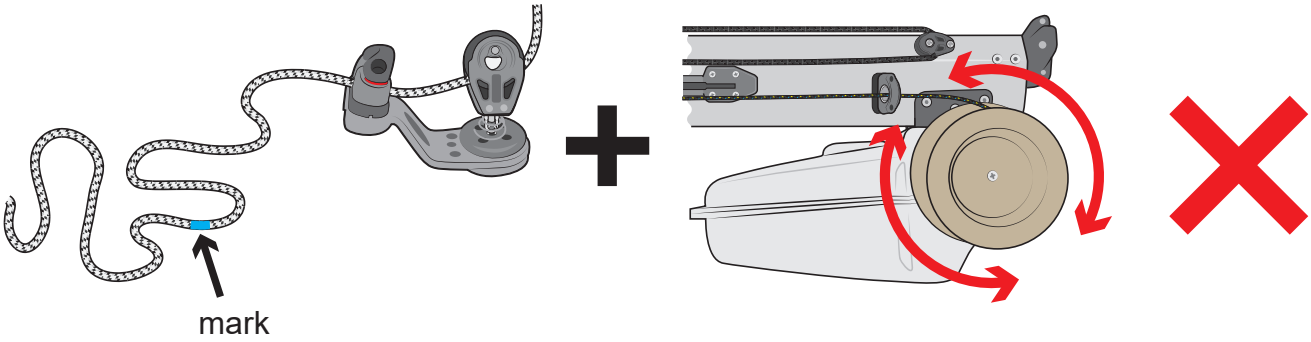

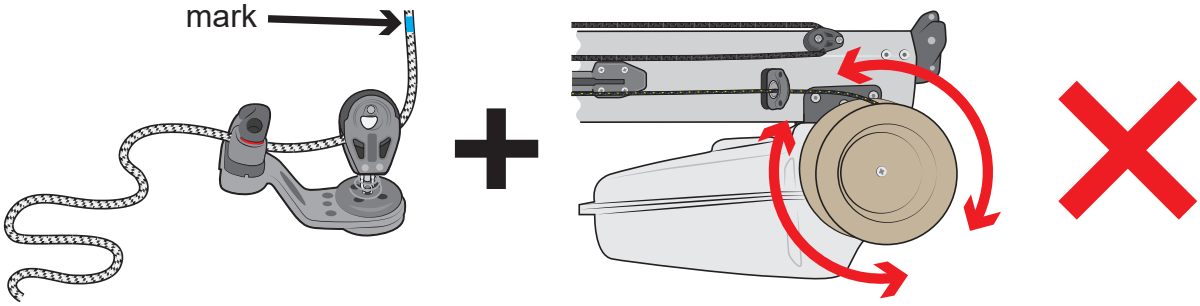

20.5 - Using the Power Boom

d)

When sheeting out in light winds:
Stop the drum if loops form along the boom.

Push the boom out by hand before restarting the drum. Carefully watch the drum line to make sure it does not unspool off the drum.

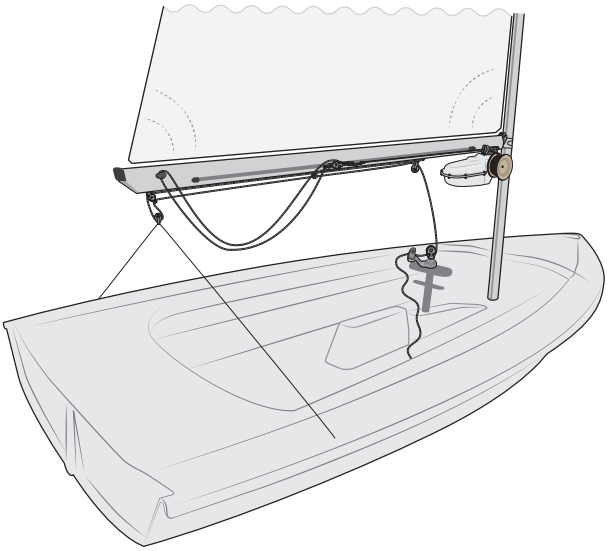

RS venture connect

Seated Control System

21. Electronic Joystick & Sip / Puff Controller Operating Guide

PLEASE FOLLOW RIGGING GUIDE IN CORRECT ORDER

RS venture

21.1 - Fitting the Sip / Puff Controller

a)

Make sure the power switch is in the ‘off’ position.

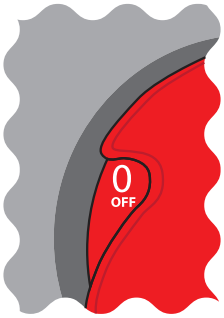

b)

Plug the grey wire from the joystick into the black ‘Peli Box’.

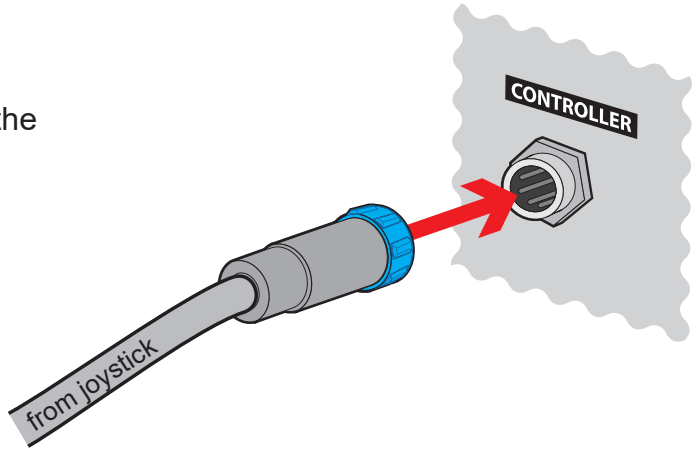

c)

Plug the clear tube from the sip / puff headset into the joystick box.

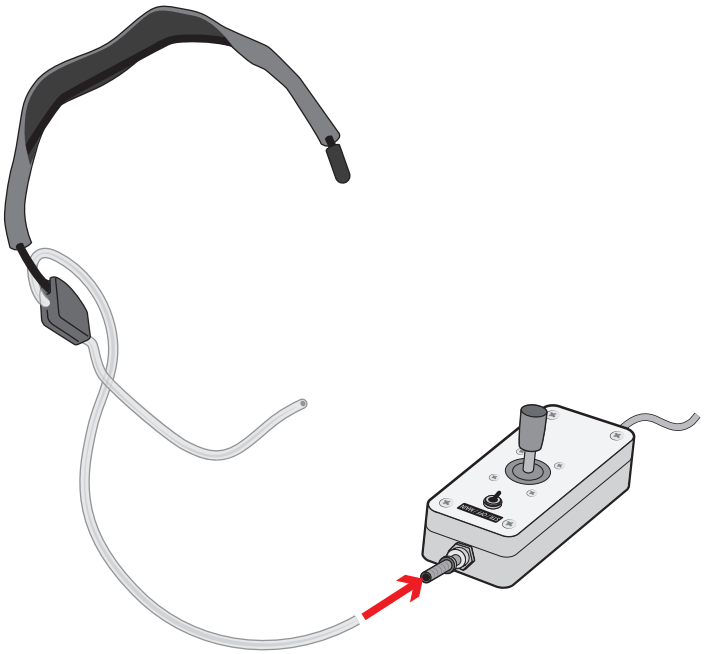

d)

Put headset on

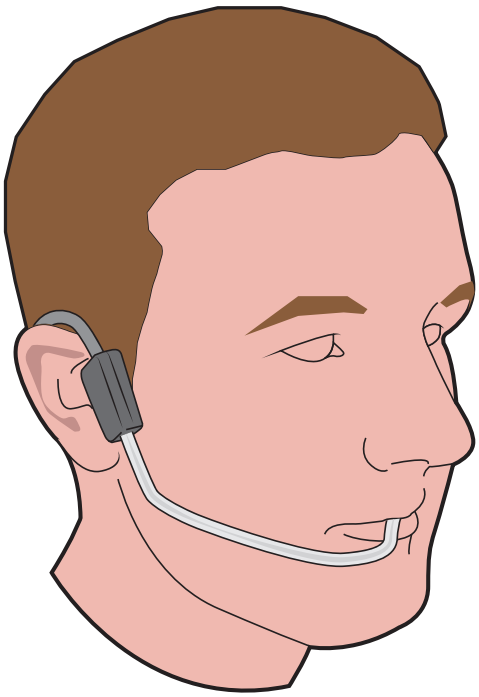

21.2 - Using the Sip / Puff Controller

a)

With the rocker switch in STR position:

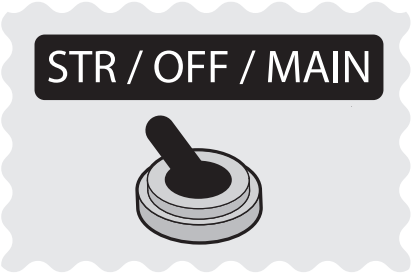

Sip / puff will operate the steering.

Constant positive or negative pressure will move tillers left or right.

If you stop positive or negative pressure the tillers will stop moving.

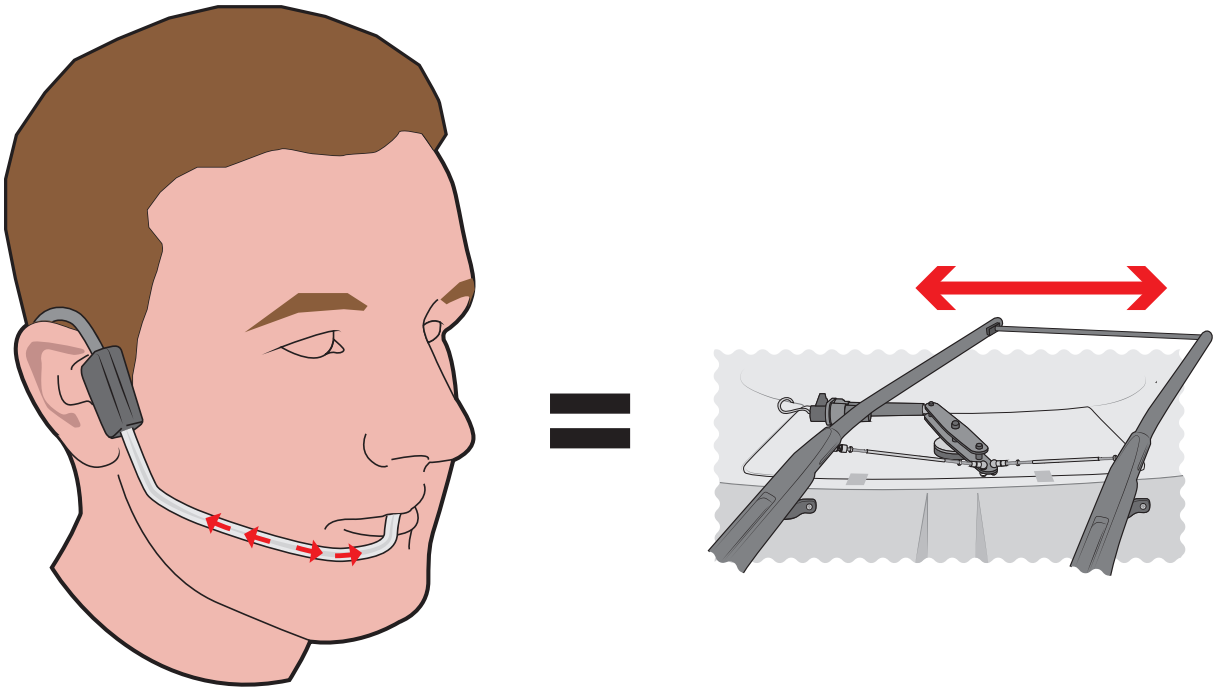

The joystick will operate mainsheet but will interfere with the sip / puff control if steering axis is used.

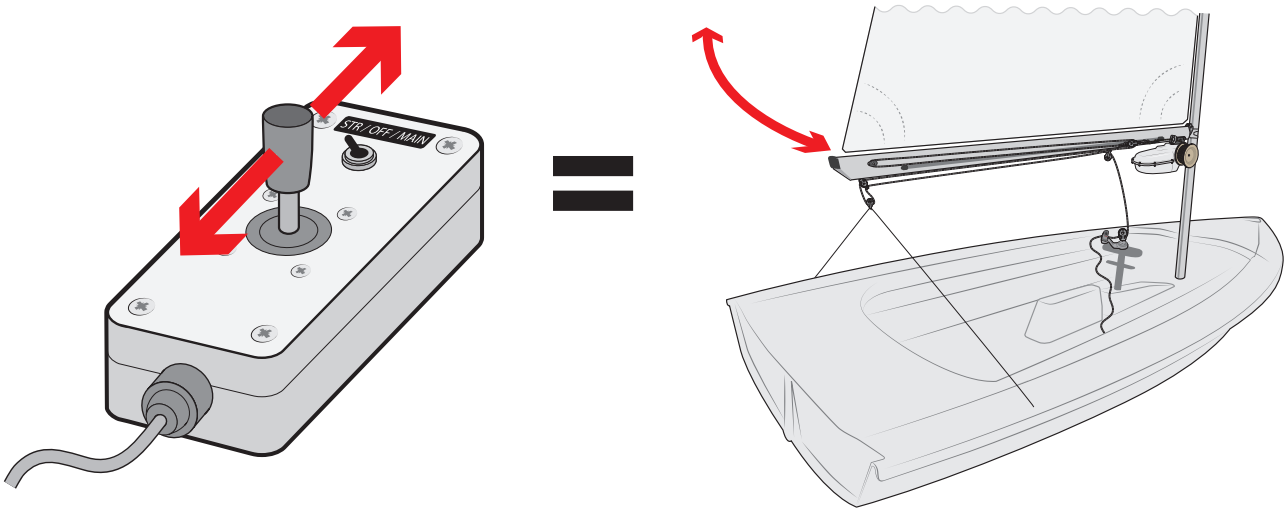

b)

With the rocker switch in MAIN position:

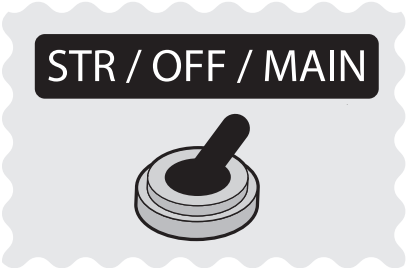

Sip / puff will operate the mainsheet.

Constant positive or negative pressure will sheet in or out.

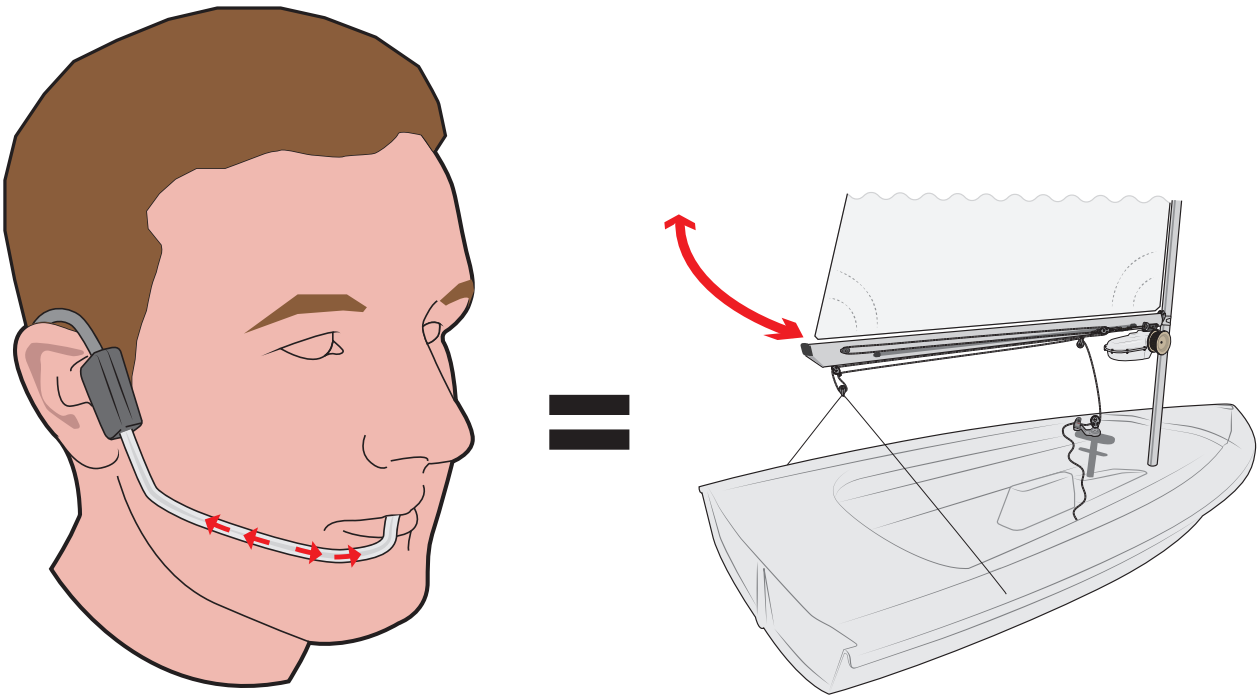

The joystick will control the steering but will interfere with the sip / puff control if the mainsheet axis is used.

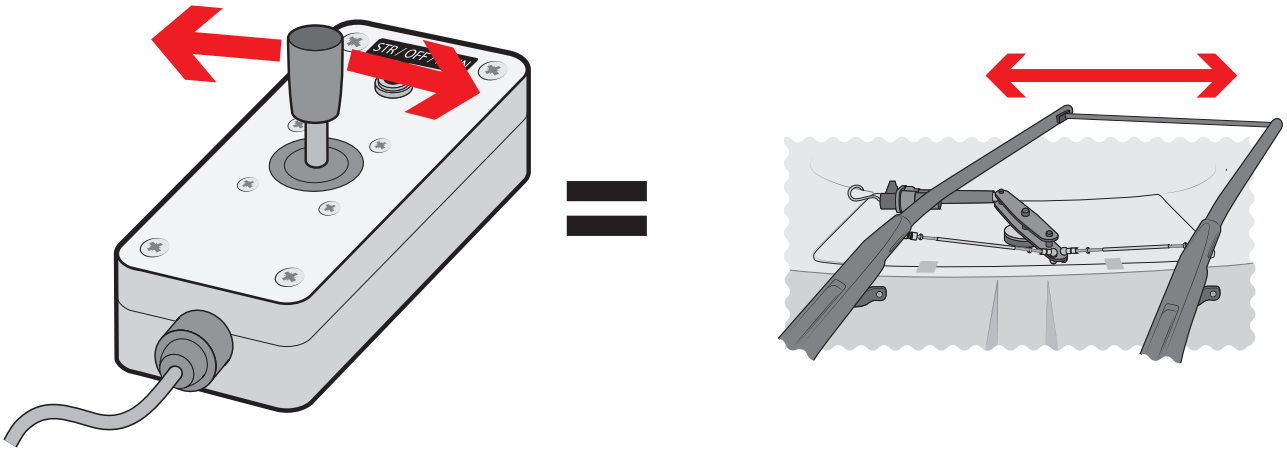

21.2 - Using the Sip / Puff Controller

c)

With the rocker switch in OFF position:

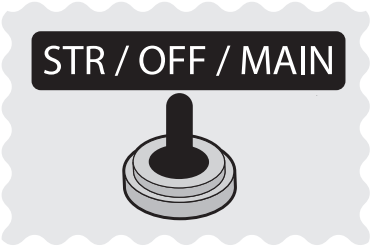

Joystick will control steering and mainsheet.

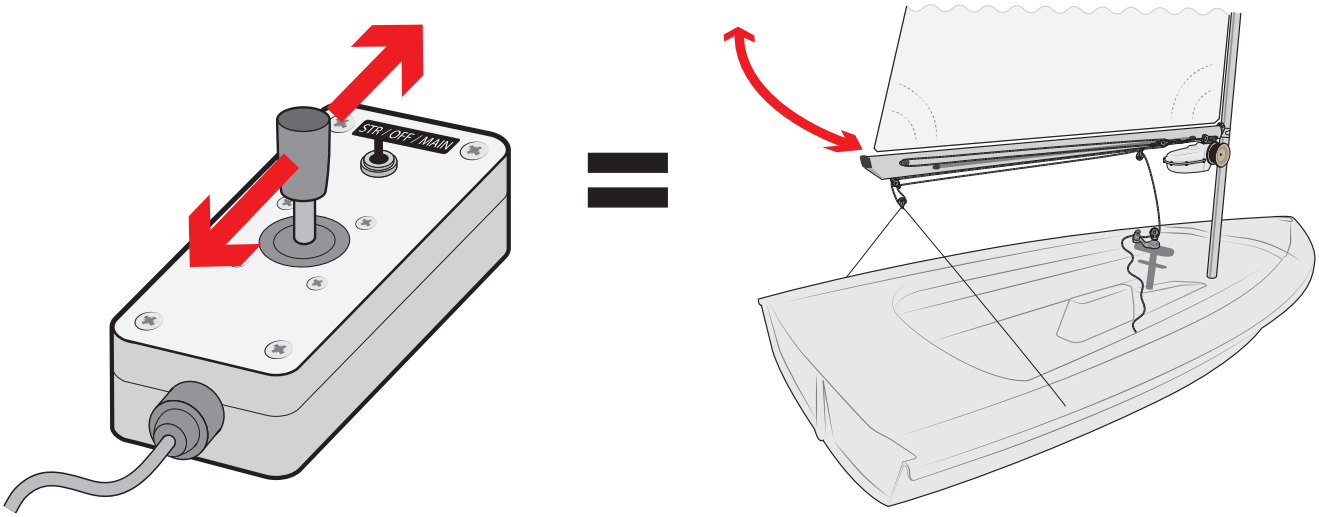

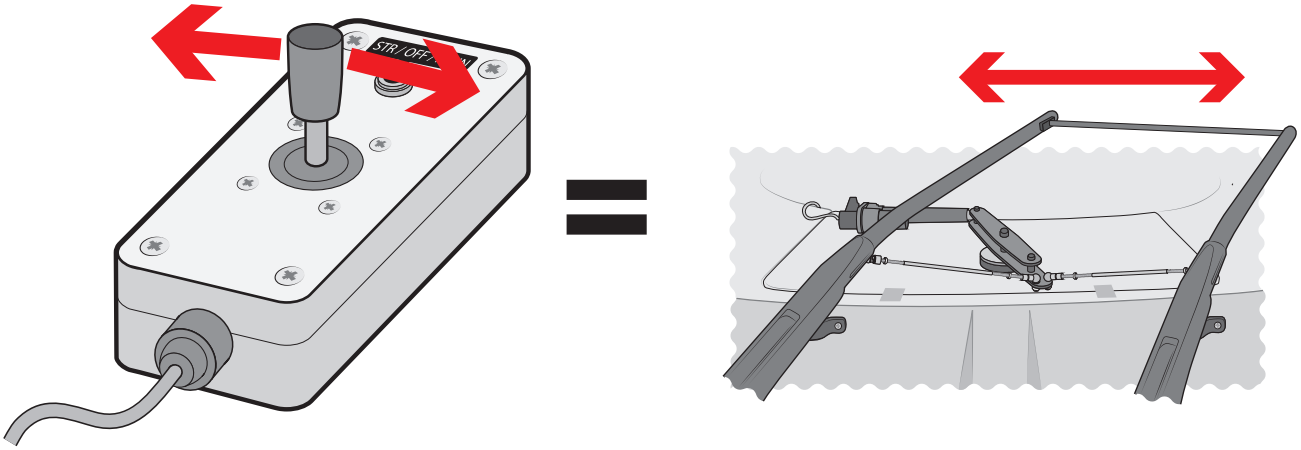

RS venture connect

Seated Control System

22. Problem Solving

PLEASE FOLLOW RIGGING GUIDE IN CORRECT ORDER

RS venture

22.1 - Troubleshooting

Slow rudder or mainsheet movement	• Low battery charge
All systems inoperative	• 4 amp blade fuse needs replacement. • Low battery charge. • Power switch not connected or connection issue. • See note on control board lights. **(5.2)**
Individual component failure	• Wire connection issue • See note on control board lights. **(5.2)**

22.2 - Control Board Lights

There are lights on the control board which can be used to determine whether the unit is functioning properly or to aid with troubleshooting.

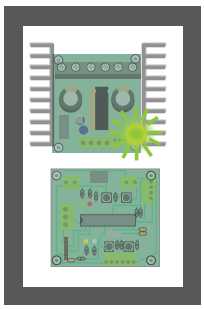 X 8	 Power supply functioning normally
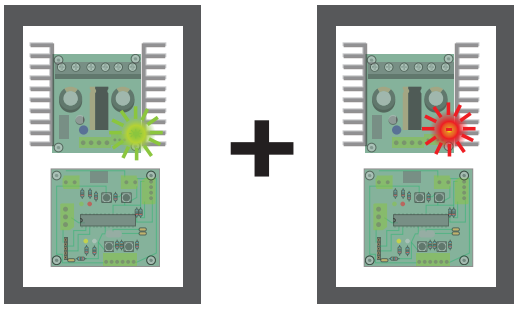	 Power supply depleted

22.2 - Control Board Lights

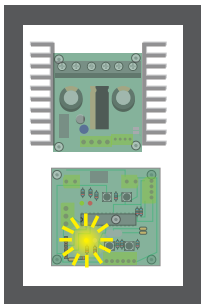	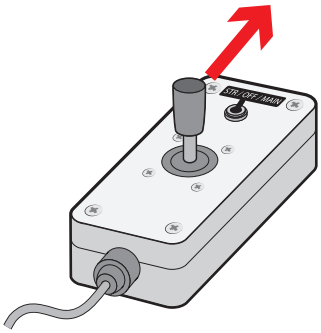 Fwd signal received from controller. (Joystick or Sip / Puff)
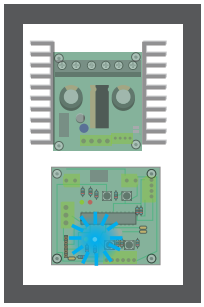	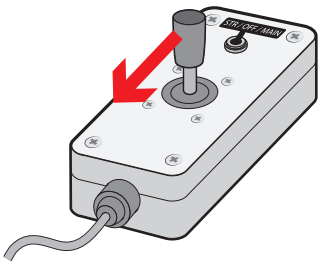 Back signal received from controller. (Joystick or Sip / Puff)
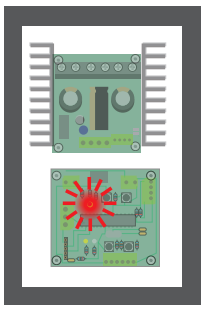	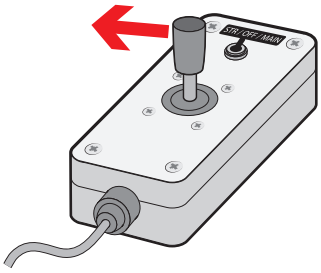 Left signal received from controller. (Joystick or Sip / Puff)
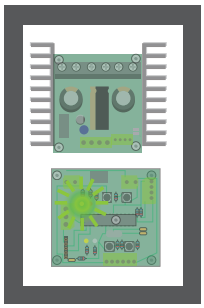	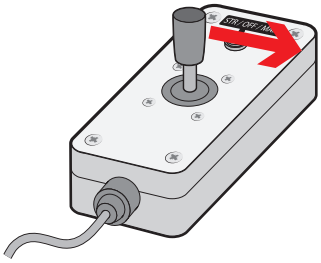 Right signal received from controller. (Joystick or Sip / Puff)

Light on when controller activated but no movement = connection or motor / ram issue

No light on when controller activated = connection or controller (joystick / sip puff) issue

RS venture connect

SCS Modifications

Appendix - 1 - Steering System

To change steering to ‘left is right / right is left’

a) Remove the existing joystick control lines.

b)

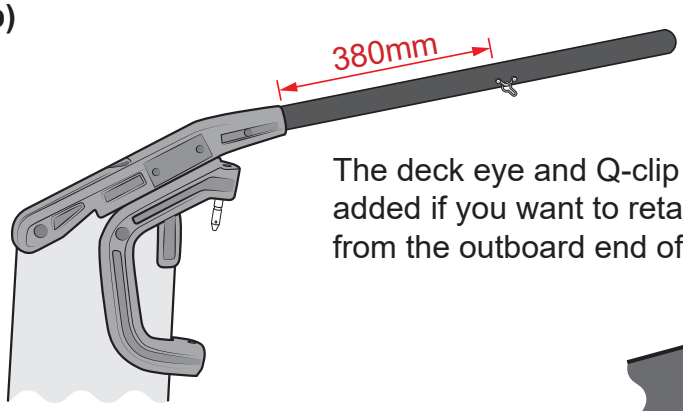

The deck eye and Q-clip on the tiller needs to be moved (or a new one added if you want to retain the option of the original system) to 380mm from the outboard end of each tiller.

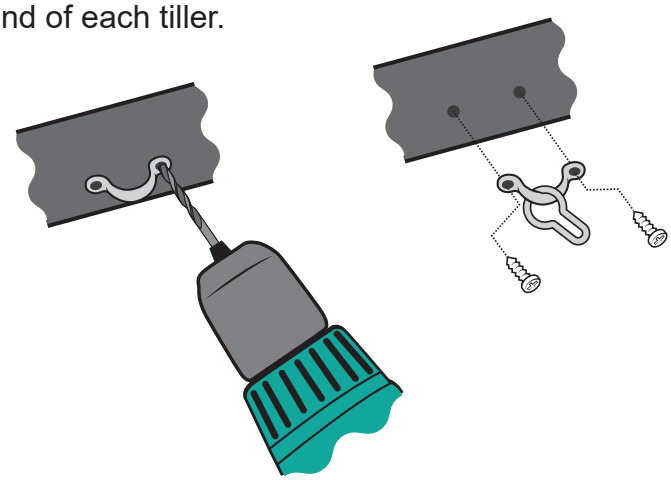

c)

New lines are 3m x 3mm D12 (x2)

Attach the end of control lines to deck organisers on either side of the boat as shown.

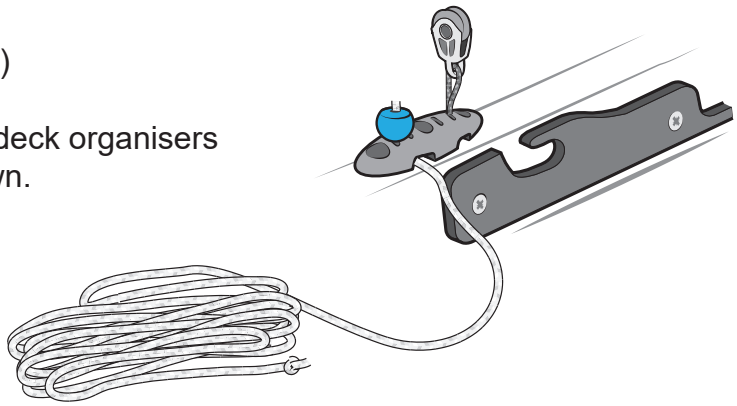

d)

Take the end of the steering line and pass it around the turning block in the steering handle.

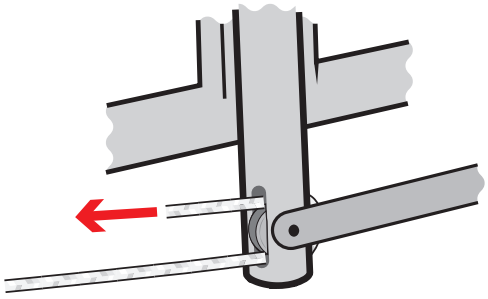

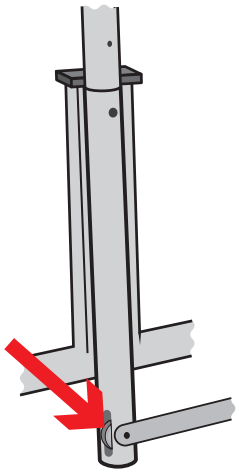

e)

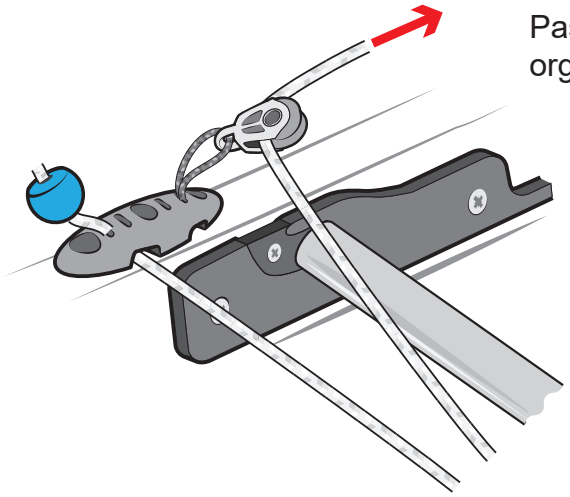

Pass the end of the line through the block on the organiser which it came from.

f)

Pass the line straight to the rear most deck organiser on the gunwhale (on the same side of the boat) and around the block.

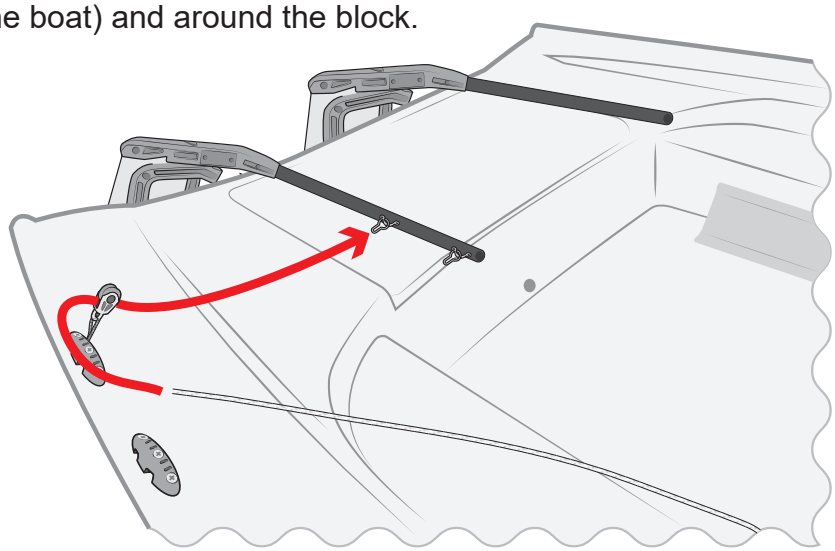

g)

Tie several spaced knots in the end of the line, then attach the line to the tiller by sliding one of the knots into the Q-clip.

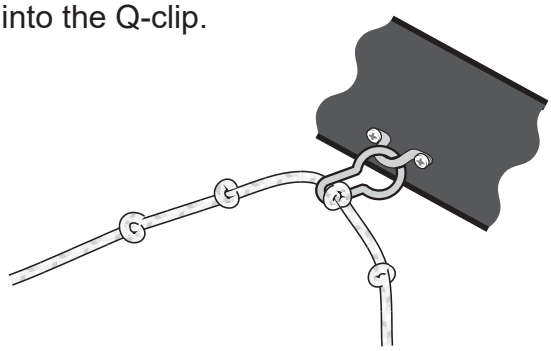

h)

Repeat on the other side of the boat.

Appendix - 1 - Steering System

The steering system must now be calibrated.

a) Using the calibration pin attached to one of the steering columns, lock the steering handles in a vertical position.

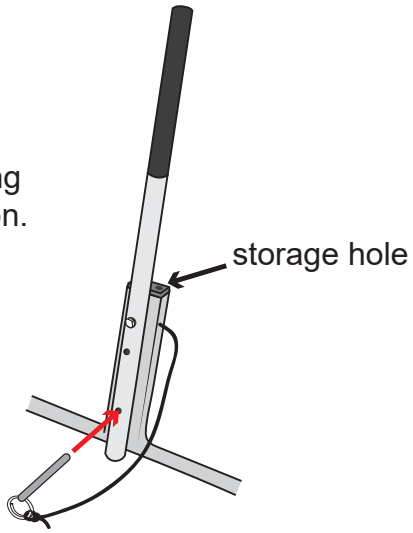

b) With the calibration pin still in place, adjust the lines so that the tension is even and the rudders face forwards. The tension can be adjusted at either end of the line by selecting which knot is in the clip.

c) Remove the calibration pin.

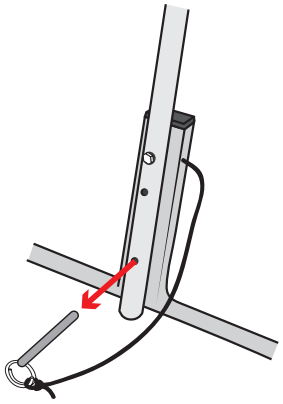

d) Try moving the steering handles to check that the rudders respond correctly. If you have applied too much tension to the steering lines the handles will be hard to move; too little and the boat will be slow to respond.

Bear in mind that adjusting one end of one line will have an effect on the entire system, and with a little trial and error you should be able to set it up in a way that works best for you.

The steering lines may periodically need adjusting as the rope may stretch slightly with time.

Hint:
You may want to mark which knots you use before removing the rudders from the boat to save you calibrating it again next time you use it!

Appendix - 1 - Steering System

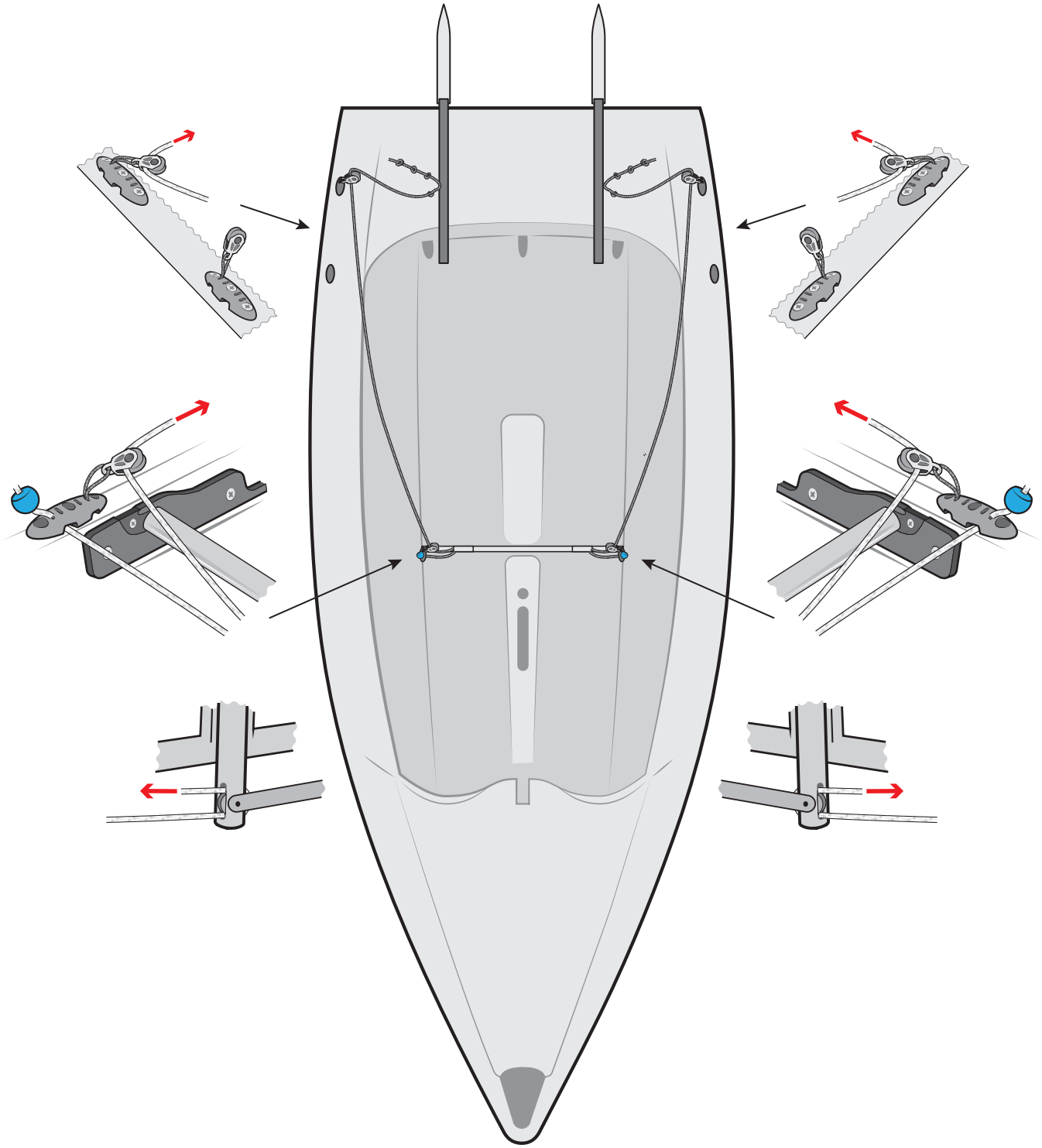

RS venture connect

Rigging Guide

10. Completion

PLEASE FOLLOW RIGGING GUIDE IN CORRECT ORDER

Now you are almost ready to go RS Venture Connect sailing.

If you have not already done so, coil the main and jib halyards neatly and stow them in the halyard bag on the starboard side, or in the Velcro pocket in the base of the chute sock if you have the gennaker.

Now you are ready to launch and sail your RS Venture Connect!

RS venture connect

Rigging Guide

11. Sailing Hints

PLEASE FOLLOW RIGGING GUIDE IN CORRECT ORDER

11.1 - Introduction

The RS Venture Connect is a very rewarding boat to sail – to fully appreciate its handling, you should be comfortable with the basic techniques of sailing small boats. If you lack confidence or feel that a refresher is in order, there are many approved sailing schools which can be recommended. See **www.rya.org.uk** for more information.

While we offer you a few hints to aid your enjoyment of your new boat, they should not be considered as a substitute for an approved course in dinghy sailing. In order to build your confidence and familiarise yourself with your new boat, we recommend that you choose a fairly quiet day with a steady wind for your first outing.

11.2 - Launching

With the sails fully hoisted, and the rudder attached, the boat should be wheeled into the water, keeping it head to wind as far as possible. If you have a crew, s/he can hold the boat head to wind whilst the trolley is stowed ashore.

TOP TIP

If the tide is coming in as you launch, make sure that you leave the trolley far enough up the beach that it will not be swept away.

11.3 - Leaving the Beach

The easiest way to get going is for the helm to hop aboard while the crew holds the boat. The helm should move back to his normal position, and lower some of the rudder blade. Then, s/he may instruct the crew to push the bow off the wind and climb in. Once the depth allows, the helm should turn the boat head to wind while the crew lowers the keel as described in **section 7**.

Make sure the keel is held down tightly with the Velcro strap.

TOP TIP

If you are using the jib, pulling this sail in as you leave the beach will ensure that the bow continues to swing away from the direction that the wind is blowing from.

As soon the water is deep enough, make sure that you lower the rudder blade fully by pulling hard on the rudder downhaul. You will know it is fully down if you feel a gentle “thud” as the front face of the blade hits the front face of the stock. Cleat the downhaul and tidy it by winding it around the tiller. Pull the sail in and you are away! For the best performance, you should ensure that you and your crew position yourselves so that the boat is sailing through the water as upright as possible.

TOP TIP

As a general rule, sit further forward in lighter winds and further aft in stronger breezes.

11.4 - Sailing Close-Hauled and Tacking

When sailing close-hauled, or as close as possible to the wind, it is important to get the boom as near as possible to the centerline, especially when sailing the with the mainsail and jib. The kicking strap should be firmly tensioned for upwind work. To pull it on, quickly put the boat head to wind. You should hold the tiller extension across your body, with a knuckles-up grip, enabling you to use one or two fingers as a temporary cleat when adjusting the mainsheet. The jib sheet should be pulled in fairly hard when sailing upwind – tighter in stronger winds and less so in lighter winds. Sail to the jib tell-tails, keeping the one on the back of the sail streaming and the one closest to you either streaming or lifting upwards slightly.

To tack, push the tiller extension away from you and, as the boat starts to turn, step across the cockpit facing forwards. Once the boat has completed the turn, bring the tiller back into the center before sitting down on the new side, with the tiller extension behind your back. When you are settled, swap the mainsheet and the tiller extension into the new hands.

If the boat slows right down and feels lifeless when close-hauled, you could be sailing too close to the wind. Ease the mainsheet and 'bear off' away from the wind for a while to get the boat going again.

11.5 - Sailing Downwind and Gybing

When sailing downwind, both sails should be let out as far as possible. To gybe, pull the tiller towards you and, as the boat starts to turn, step across the cockpit facing forward. Once the boat has completed the turn, bring the tiller back into the center before sitting down on the new side, with the tiller extension behind your back. Often, the boom will not want to come across until you have nearly completed the gybe, so it often pays to give the mainsheet a tweak to encourage the boom over at the moment that you want it to come! Don't forget to duck your head as the boom comes over. Once you are settled, swap the mainsheet and the tiller extension into the new hands.

11.6 - Using the Gennaker

If you are inexperienced in using a gennaker, choose a fairly quiet day for you first excursion. A gennaker nearly doubles your sail area, and should be treated with a healthy degree of respect!

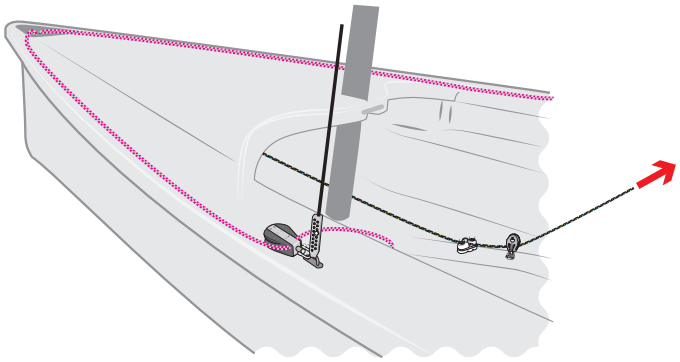

For your first hoist you should be sailing downwind on a broad reach, with the wind coming over the helm's left shoulder. The crew should sit in the center of the boat, astride the centreboard case, and hoist the gennaker by pulling the gennaker halyard from the starboard halyard block

The gennaker halyard pulls the bowsprit out at the same time – when the gennaker is hoisted, you are ready to go. The crew, or the helm if sailing singlehanded, should now pull gently on the leeward gennaker sheet until the gennaker has filled. Gennakers may be effectively used from a close reach to a broad reach so, to get downwind, one should become adept at gybing. It is not possible to tack with the gennaker hoisted. For the best effect, the gennaker sheet should always be eased as far as possible, so that the luff is just on the point of curling.

Gybing with the gennaker is fairly straightforward. Like the jib, it should be pulled across at the same time as the mainsail comes across. As soon as it has been pulled in and filled with wind, it should again be immediately eased for maximum efficiency and speed

To drop the gennaker, reverse the procedure used to hoist. The boat should be sailing on a broad reach, and the slack in the gennaker downhaul is pulled in from the left hand halyard block As the gennaker downhaul goes tight, the gennaker halyard should be popped out of the cleat. Then, pull the remainder of the gennaker downhaul through until the gennaker is pulled sharply into the chute. Dropping the gennaker on tighter reaches is harder, and requires more effort on the gennaker downhaul.

TOP TIP

Tie a rope bobble onto the gennaker halyard, about 10 cm from the bowline that is attached to the head of the gennaker. This will make dropping the gennaker easier.

HINT

The gennaker can “bunch up” when entering the chute. This can be minimised by keeping some tension on the gennaker sheet, preventing the clew from being sucked into the chute with the main body of the gennaker.

When the gennaker is fully lowered, tidy the sheets and the halyard to keep the cockpit area clear.

RS venture connect

Rigging Guide

12. Maintenance

PLEASE FOLLOW RIGGING GUIDE IN CORRECT ORDER

12.1 - Hull Care

The RS Venture is made using a robust polyester resin, fiberglass and coremat laminate. Although very robust, your Venture should be supported ashore on an approved RS trolley. The hull can also be stored on the transom, but never store the boat for long periods on its side. When dealing with a marine environment, equipment gets wet; this in itself is not a problem. The problem starts when moisture is trapped for any length of time. Therefore, it is very important to store the boat properly ashore.

Keep your dinghy drained and well ventilated
Ensure that the boat is stored with the bow raised to allow water to drain away at the transom, or level enough to drain through the cockpit bungs either side.

Wash with fresh water
Fresh water evaporates far more quickly than salt water so, if your dinghy has been sailed in salt water, rinse it thoroughly. The fittings will also work better if regularly washed. Any stubborn marks on the hull can be removed with a light detergent, or a fiberglass cleaner and polish.

Hull damage falls into three categories:

- **SERIOUS** – large hole, split, crack, or worse. Don't be too distressed! Get the remnants back to RS Sailing – most problems can be repaired.
- **MEDIUM** – small hole or split. If this occurs during an event, sailing can often be continued as long as leaking can be prevented by drying the area and applying strong adhesive tape. CAUTION – if the damage is close to a heavily loaded point, then the surrounding area should be closely examined to ensure that it will accept the loads. Get the damage professionally repaired as soon as possible.
- **SMALL** – dents, scratching. This type of damage is not boat threatening.

The benefit of a hard-wearing fiberglass hull is that it can be invisibly repaired and refurbished to look as new again. Any reputable GRP repairer should have the skills and materials for most jobs, but it is recommended that major repairs are undertaken by a recommended RS repair center.

12.2 - Foil Care

The rudder blade is an aluminum extrusion with a loose fitting foam core. The end caps are injection molded in a nylon reinforced plastic, and are very hard-wearing and can be replaced if worn or damaged severely. The rudder blades may leak slightly, but it is nothing to worry about as very little room for water and it will normally drain out the way it came in.

Like the hull, the foils will benefit from being rinsed in fresh water regularly, when you hose down the boat.

If you are going to trail your boat frequently, you may wish to invest in an RS Sailing padded rudder bag. These will protect your RS Venture from any damage caused by the rudder and blade in transit.

12.3 - Spar Care

The mast and boom are aluminum. Wash with fresh water as often as possible, both inside and out. Check all of the riveted fittings on a regular basis for any signs of corrosion or wear.

12.4 - Sail Care

The mainsail should be rolled and stored dry, out of direct sunlight. When using a new sail for the first time, try to avoid extreme conditions as high loads on new sailcloth can diminish the racing life of the sail.

If your sail is stained in any way, try to remove it using a light detergent and warm water. DO NOT attempt to launder the sail yourself.

A sail can be temporarily repaired using a self-adhesive cloth tape, such as Dacron or Mylar. The sail should be returned to a sail maker for a professional repair. Check for wear and tear, especially around the batten pockets, on a regular basis.

12.5 - Fixtures and Fittings

All of the fixtures and fittings have been designed for a specific purpose in the boat. These items may break when placed under any unnecessary load, or when used for a different function to their intended purpose. To ensure optimum performance, wash the fixtures and fittings with fresh water regularly, checking shackles, bolts, etc. for tightness.

RS venture connect

Rigging Guide

13. Warranty

PLEASE FOLLOW RIGGING GUIDE IN CORRECT ORDER

13. Warranty

1. This warranty is given in addition to all rights given by statute or otherwise.

2. RS Sailing warrants all boats and component parts manufactured by it to be free from defects in materials and workmanship under normal use and circumstances, and the exercise of prudent seamanship, for a period of twelve (12) months from the date of commissioning by the original owner. The owner must exercise routine maintenance and care.

3. This warranty does not apply to defects in surface coatings caused by weathering or normal use and wear.

4. This warranty does not apply if the boat has been altered, modified, or repaired without prior written approval of RS Sailing. Any changes to the hull structure, deck structure, rig, or foils without the written approval of RS Sailing will void this warranty.

5. Warranty claims for materials or equipment not manufactured by RS Sailing can be made directly to the relevant manufacturer. RS Sailing warrants that these parts were installed correctly and according to the instructions provided by the manufacturer.

6. Warranty claims shall be made to RS Sailing as soon as practicable and, in any event, within 28 days of discovery of the defect. No repairs under warranty are to be undertaken without written approval of RS Sailing.

7. Upon approval of a warranty claim, RS Sailing may, at its expense, repair or replace the component. In all cases, the replacement will be equal in value to the original component.

8. Due to the continuing evolution of the marine market, RS Sailing reserves the right to change the design, material, or construction of its products without incurring any obligation to incorporate such changes in products already built or in use.

14 - Knots

Knot #1

Knot #2

Knot #3

Knot #4

Knot #5

Knot #6

Knot #1 - Knot on knot

a)

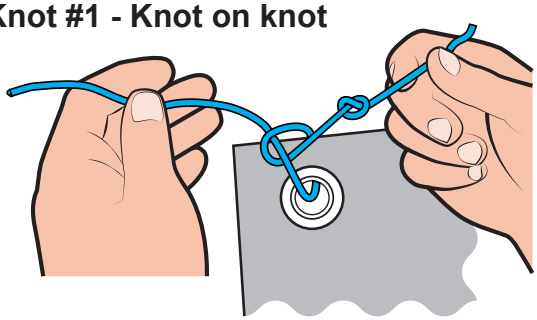

b)

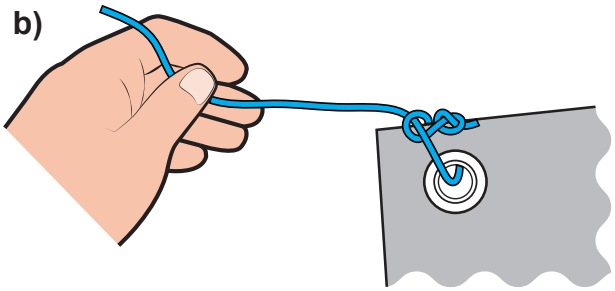

Knot #2 - Bowline

a)

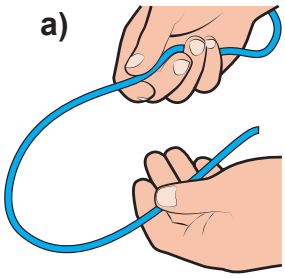

b)

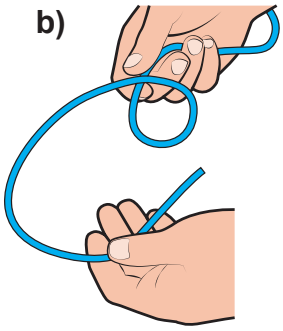

c)

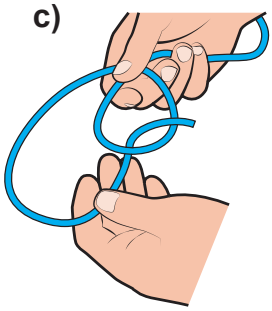

d)

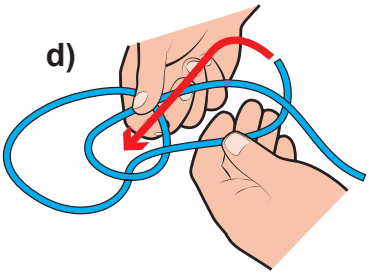

e)

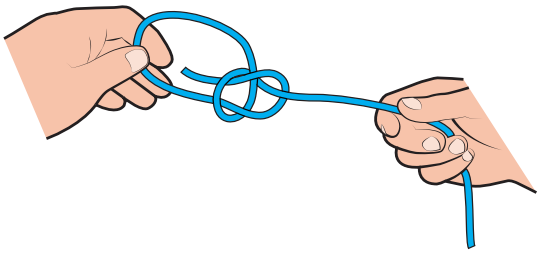

Knot #3 - Figure of eight

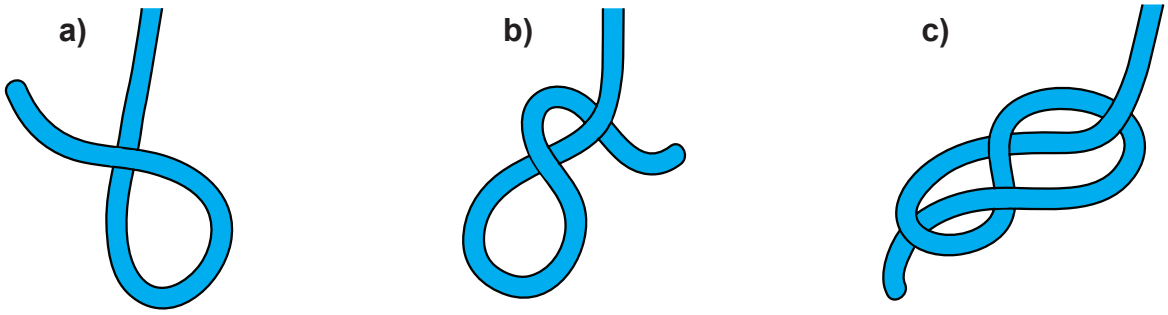

Knot #4 - Overhand knot

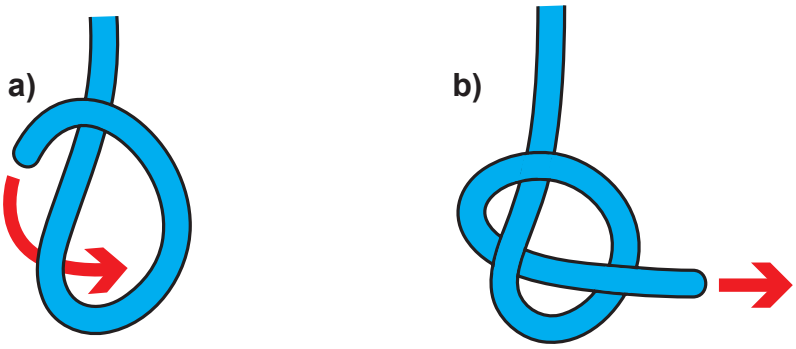

Knot #5 - Double sheet bend

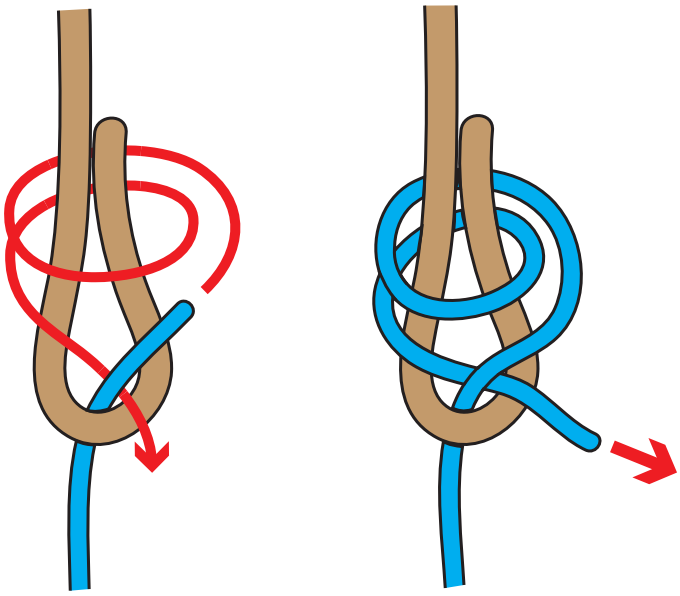

Knot #6 - Cow hitch

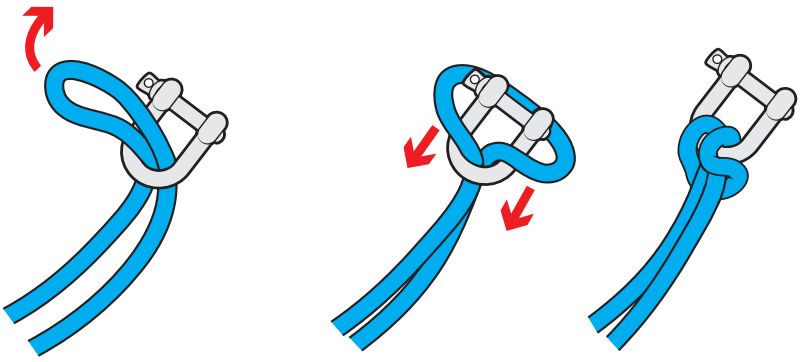

RS venture connect

Rigging Guide

15. Glossary

A

Aft	At the back
Anchor Line	Rope that attaches the anchor to the boat
Astern	Behind the boat
Asymmetric	Gennaker flown from a retractable pole at the bow

B

Back	To ‘back the sail’; allowing the wind to fill the back of the sail
Bailer	A bucket or other container used for bailing water
Batten	A thin strip of wood/plastic inserted in the sail to keep it flat
Batten Key	A key used to adjust the batten
Batten Pocket	A pocket on the sail that holds the batten
Beam	Width of the boat at the widest point of the side of the boat. The phrase ‘wind on the beam’ means that the wind is coming from the side.
Bear away	To turn downwind
Beat	To sail a zig-zag course to make progress upwind
Beaufort Scale	A measure of wind strength, from Force 1 to Force 12
Bilge Rail	The moulded line that marks the transition from the side to the bottom of the hull
Block	A pulley used for sail control lines
Boom	The spar at the bottom edge of sail
Boom Pad	The pad that fits onto the boom
Bow	The front of the boat
Bow Lifting Handle	The handle at the front of the boat, used for lifting
Bowline	A useful and reliable knot, with a loop in it
Bow Snubber	The part of the trolley that the bow rests on
Builder’s Plate	Plate that contains build information
Bung	A stopper for the drain hole

Buoy	Floating object attached to the bottom of sea – used variously for navigation,mooring, and to mark out a race course
Buoyancy Aid	Helps you to stay afloat if you fall in the water
Buoyancy Compartment	Water-tight compartment in the hull that maintains buoyancy
Burgee	Small flag at the top of the mast to show wind direction

C

Capsize	To overturn
Capsize Recovery	To right, or recover, the boat after a capsize
Catamaran	A boat with two hulls
Centreboard	The foil that sits below the hull to counteract the sideways push of the wind, and to create forward motion
Centreboard Case	The casing in the hull in which the centreboard sits
Centreline	An imaginary line that runs through the centre of the hull, from the bow to the stern
Chart datum	Depths shown on a chart, at the lowest possible tide
Cleat	A device to grip ropes and hold them in place – some grip automatically, while others need the rope tying around them
Clew	Lower corner of the sail, closest to the stern
Close hauled	Sailing as close to the wind as you can; point of sailing to sail upwind
Cockpit	The open area in the boat providing space for the `helm and the crew
Collision Regulations	The ‘rules of the road’ to avoid collisions
Compass Rose	The compass shown on a chart to aid navigation
Crew	Helps the helmsman to sail the boat, and usually handles the jib sheets
Cutter	A boat with two headsails or jibs

D

Dacron	A brand of polyester sailcloth that is wrinkle-resistant and strong
Deck	A floor-like surface occupying part of the hull
Deck Moulding	A moulded deck
Downhaul	Applies downwards tension to a sail
Downwind	To sail in the direction that the wind is blowing
Drain Hole	A hole in the hull from which trapped water can be drained

Draught	The depth of the vessel below the surface

E

Ease	To ‘ease sheets’ means to let the sail out gently

F

Fairlead	A pulley block used to guide a rope to avoid chafing
Foils	The daggerboard and the rudder
Foot	The bottom edge of a sail
Fore	Towards the front of the boat
Forestay	The wire line that runs from the front of the mast to the bow of the hull, holding the mast in position
Furl	To gather a sail into a compact roll and bind it against the mast or forestay

G

Gennaker	A large sail that is hoisted when sailing downwind
Gennaker Chute	Webbing pocket in which the gennaker is stowed when not hoisted
Gennaker Pole	The sprit that protrudes from the front of the hull, to which the tack of the gennaker is attached
Gnav Bar	Bar that sits between the mast and the boom, performing the same function as a kicking strap
Gnav Control Line	Line that applies and releases tension to the gnav
Gooseneck	The ‘jaws’ of the boom that clip onto the mast
Gunwhale	The top edge of the hull, that you sit on when leaning out to balance the boat
Gybe	To change tack by turning the stern of the boat through the wind.

H

Halyard	The rope used to hoist sails
Halyard Bag	Bag attached to the hull, in which the halyards can be stowed
Head	The top corner of a sail

‘Head to Wind’	To point the bow in the direction that the wind is blowing from, causing the sails to flap
‘Heave to’	To stop the boat by easing the main sheet and backing the jib
Heel	A boat ‘heels’ when it leans over due to the sideways force of the wind
Helm/Helmsman	The person who steers the boat, or another name for the tiller
Hoist Block	Block behind which the gennaker halyard is pulled when hoisting the gennaker
Hull	The hollow, lower-most part of the boat, floating partially submerged and supporting the rest of the boat

I

‘Into the Wind’	To point the bow in the direction that the wind is blowing from, causing the sails to flap
Inversion	A capsize where the boat turns upside down, or ‘turtles’

J

Jammer	Another word for a cleat
Jib	The small sail in front of the mast
Jib Sheet	The rope used to control the jib

K

Kicking strap	The rope system that is attached to the base of the mast and the boom, helping to hold the boom down
Knot	A measurement of speed, based on one minute of latitude

L

Launching	To leave the slipway

Latitude	Imaginary lines running parallel round the globe from east to west. They help you measure position and distance on a chart.
Leech	The back edge of the sail
Leeward	The part of the boat furthest away from the direction in which the wind is blowing
Leeway	The amount of sideways drift caused by the wind
Leverage	The result of using crew weight as a 'lever' to counteract heel caused by the wind
Lie to	A way of stopping the boat temporarily by easing sheets on a close reach
Lifejacket	Unlike a buoyancy aid, a lifejacket will keep a person fully afloat with their head clear of the water
Longitude	Imaginary lines running round the globe from north to south, like segments of an orange. Used with lines of latitude to measure position and distance
Lower Furling Unit	The fitting at the bottom of the forestay that enables the jib to be furled
Luff	The front edge of the sail

M

Mainsail	The largest sail on a boat
Mainsail Clew Slug	The fitting that sits in the track on the boom, to which the clew of the mainsail is attached
Mainsheet	The rope used to control the mainsail
Mainsheet Bridle	The rope runs across the transom of the boat, to which the mainsheet is attached
Mainsheet Centre Block	The main block, usually fixed to the cockpit floor, through which the mainsheet passes
Man Overboard Recovery	The act of recovering a 'man overboard' from the water
Mast	The spar that the sails are hoisted up
Mast Foot	The bottom of the mast
Mast Gate	Fitting which closes across the front of the mast at deck level, holding the mast in place

Mast Lower Section	The bottom section of a two-piece mast
Mast Step	The fitting on the deck that the mast fits into
Mast Top Section	The top section of a two-piece mast
Meteorology	The study of weather forecasting
Moor	To tie the boat to a fixed object
Mylar	A brand of strong, thin, polyester film used to make racing sails

N

National Sailing Federation	Body that governs sailing in a nation. In the UK, this is the Royal Yachting Association
Navigation	To find a way from one point to the other
Neap Tide	Tides with the smallest tidal change

O

'Off the Wind'	To sail in the direction that the wind is blowing
Outboard Bracket Kit	Bracket which enables an outboard engine to be attached to the transom
Outboard Engin	Small portable engine that attaches to the transom
Outhaul	The control line that applies tension to the foot of the sail, by pulling the sail along the boom
Outhaul Hook	The fitting on the boom that hooks the eye at the back of the sail, and to which the outhaul is attached

P

Painter	The rope at the bow used to tie the boat to a fixed object
Pontoon	A floating jetty to moor your boat to
Port	The left-hand side of the boat, when facing forwards

R

RS Dealer	A third-party who sells the RS range
Reach	Sailing with the wind on the side of the boat

Reef	To make the sails smaller in strong winds
Retaining Pin	On a trolley, to hold the launching trolley to the road base
Road Base	A trolley that you place your boat and launching trolley upon to trail behind a vehicle
Rowlocks	U shaped fittings that fix onto the gunwale and holds your oars in position while rowing
Rowlock Holes	The holes in the gunwhale into which the rowlocks fit
Rudder	The foil that, when attached to the stern, controls the direction of the boat
Rudder Blade	The large, rigid, thin part of the rudder
Rudder Downhaul	The control line that enables you to pull the rudder into place
Rudder Pintle	The fitting on the transom onto which the rudder stock fits
Rudder Stock	The top part of the rudder, usually including the tiller, into which the rudder blade fits, and which then attaches to the rudder pintle
Run	To 'run with the wind', or to sail in the direction that the wind is blowing

S

Safety-Boat Cover	Support boats, usually RIBs, in case of emergency
Sail	An area of material attached to the boat that uses the wind to create forward motion
Sailmaker	A manufacturer of sails
Sail Number	The unique number allocated to a boat, displayed on the sail when racing
Sail Pressure	A sail has 'pressure' when it is working with the wind to create motion
Sailing Regatta	An event that usually comprises of a number of sailing races
Shackle	A metal fitting for attaching ropes to blocks, etc.
Shackle Key	Small key used to undo tight shackles
Sheet	A rope that controls a sail
Shroud	The wires that are attached to the mast and the hull, holding the mast up
Side Safety Line	The line that runs along the side of the hull
Single Handed	To sail a boat alone
Single-Line Reefing System	An efficient method of reefing with one line

Slider	Sliding fitting on the boom to which the gnav bar is attached
Soundings	The numbers on a chart showing depth
Spars	The poles, usually carbon or aluminium, to which the sail is attached
Spreaders	Metal fittings attached to the mast which hold the shrouds out
Spring Tide	The tides with the biggest range and strongest currents
Starboard.	The right-hand side of the boat, when facing forwards
Stern	The back of the boat
Stern Lifting Handles	The handles at the stern, used for lifting the boat
Stopper Knot	A form of knot used to prevent a rope from sliding through a fitting, such as a pulley or a cleat

T

Tack	a) To change direction by turning the bow of the boat through the wind b) The bottom front corner of a sail
Tack Bar	The bar at the bow of the hull, to which the tack of the jib is attached
Tack Line	The rope that emerges from the front of the gennaker pole, to which the tack of the gennaker is attached
Tender	A small vessel, usually used to transport crew to a larger vessel
Tidal height	The depth of water above chart datum
Tidal range	The difference between the depth of water at low and high tide
Tidal stream	The direction in which the tide is flowing
Tiller	The stick attached to the rudder, used to steer the boat
Tiller Extension	A pole attached to the tiller to extend its reach, usually used when hiking
Toe Straps	The straps to tuck your feet under when you lean out to balance the boat.
Top Furling Unit	Fitting at the top of the forestay which enables the jib to be furled
Towing Line	A rope attached to the boat, used to connect to a towing vessel
Transit	An imaginary line between two fixed objects, used to ensure that you are staying on course
Transom	The vertical surface at the back of the boat
Trim	Keeping the boat level fore and aft
Trimaran	A boat with three hulls
Trolley	A wheeled structure, used to move the boat around on land
Trolley Supports	The part of the trolley in direct contact with the hull

U

‘Under Weigh’	A term derived from the act of ‘weighing’ anchor, meaning to be in motion
Upwind	To sail against the direction in which the wind is blowing

W

Wetsuit	Neoprene sailing suit designed to keep you warm when wet
Windward	The part of the boat closest to the direction in which the wind is blowing